OLI

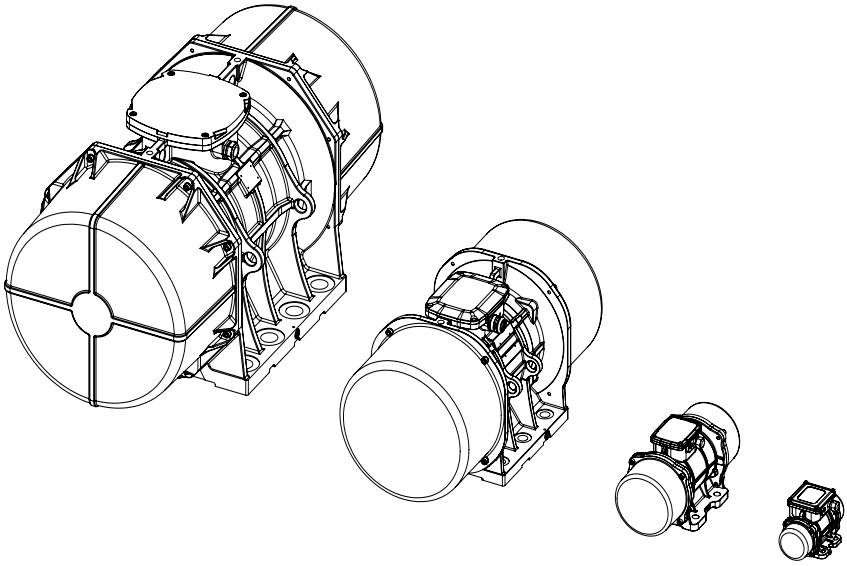

- **MOTOVIBRATORI ELETTRICI ESTERNI** IT
- **ELECTRIC EXTERNAL MOTOVIBRATORS** EN
- **ELEKTRISCHE AUSSENRÜTTLER** DE
- **MOTOVIBRATEURS EXTERNES ELECTRIQUES** FR

MVE

Serie J: **II2 D Ex tb IIIC Tx Db IP66**

Ex tb IIIC Tx Db IP66
T.Amb -20/+40°C

Serie E: **II2 D Ex tb IIIC Tx Db IP66**

Ex tb IIIC Tx Db IP66

Class II Div 2 Group F,G T4
Ex tb IIIC Tx Db IP66
T.Amb -20/+40°C

Serie H: **II2 D Ex tb IIIC Tx Db IP66**

Ex tb IIIC Tx Db IP66
T.Amb -20/+55°C

CODE: **OLMVEA5II2D01** | REV:**06** | DATE:**01/2023**

OLI

CONTENTS

EN

1 TECHNICAL CATALOGUE

1.1 PURPOSE AND IMPORTANCE OF THE MANUAL..... T.36
1.2 DESCRIPTION..... T.37
1.3 NOMENCLATURE..... T.37 → T.38
1.4 OPERATING INSTRUCTIONS..... T.38 → T.39
1.5 WARNINGS..... T.39 → T.40
1.6 WARRANTY..... T.40
1.7 STORAGE..... T.41

2 INSTALLATION, USE AND MAINTENANCE

2.1 IDENTIFICATION..... M.43 → M.47
2.2 TRANSPORT AND PACKAGING..... M.47
2.3 INSTALLATION..... M.48
2.4 ELECTRICAL CONNECTIONS..... M.49 → M.54
2.5 ADJUSTING THE VIBRATION INTENSITY..... M.54
2.6 START-UP PROCEDURE..... M.55
2.7 LIMITS OF USE..... M.55
2.8 MAINTENANCE..... M.56 → M.57
2.9 RESIDUAL RISKS..... M.57 → M.58
2.10 SCRAPPING THE MACHINE..... M.58
2.11 RETURNING THE MACHINE..... M.58
2.12 DECLARATION OF CONFORMITY..... M.58 → M.62

3 SPARE PARTS

SPAREPARTS..... R.64
TROUBLESHOOTING..... R.65

TAB DRAWINGS AND TABLES

DRAWINGS OF SPARE PARTS..... TAB.131 → TAB.134
OVERALL DIMENSIONS..... TAB.135 → TAB.137
CERTIFICATION LEVEL..... TAB.138
SERIE E ELECTRIC FEATURES..... TAB.140 → TAB.148
SERIE H ELECTRIC FEATURES..... TAB.149 → TAB.156
SERIE J ELECTRIC FEATURES..... TAB.157 → TAB.164
SERIE E - H - J MECHANICAL FEATURES..... TAB.166 → TAB.173
SERIE E - H - J DIMENSIONAL FEATURES..... TAB.175 → TAB.182
EXPOSED CONDUCTIVE PART ADJUSTMENT..... TAB.183 → TAB.187
TIGHTENING TORQUES..... TAB.188 → TAB.189
HANDLING..... TAB.190 → TAB.191

OLI

TECHNICAL CATALOGUE

1

EN

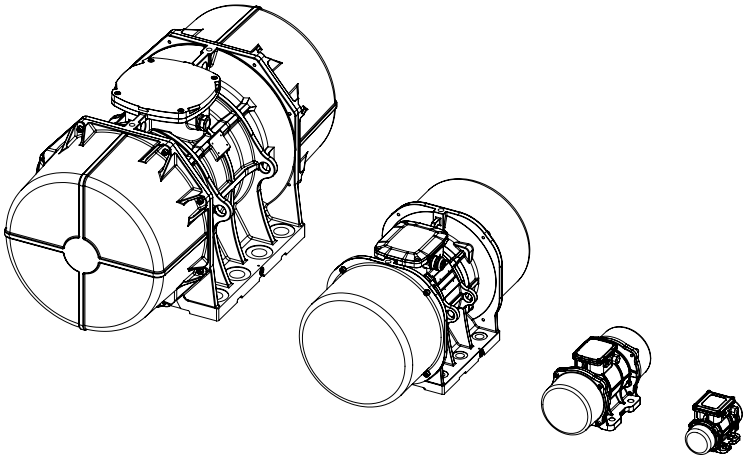

MVE

Serie J:

II2 D Ex tb IIIC Tx Db IP66

Ex tb IIIC Tx Db IP66
T.Amb -20/+40°C

Serie E:

II2 D Ex tb IIIC Tx Db IP66

Ex tb IIIC Tx Db IP66

Class II Div 2 Group F,G T4
Ex tb IIIC Tx Db IP66
T.Amb -20/+40°C

Serie H:

II2 D Ex tb IIIC Tx Db IP66

Ex tb IIIC Tx Db IP66
T.Amb -20/+55°C

EN

ISO 9001 quality system certification

All the products described in this manual have been manufactured in accordance with the operating procedures defined by the Quality System of OLI S.p.A.
The company's Quality System, certified in accordance with International ISO 9001 Standards, ensures that the entire production process, from the order to the technical support after delivery, is carried out in a controlled and suitable way to guarantee the quality standard of the product.
Reproduction, even in part, without permission is prohibited.

General information

OLI S.p.A.
Via Canalazzo, 35
I – 41036 Medolla – (MO)
ITALY

☎ +39 / 0535 / 410611
Fax +39 / 0535 / 410650
E-mail info@olivibra.com
Website www.olivibra.com

The range of MVE vibrators is the result of 40 years of experience in the field of vibration with applications in construction and industrial sectors, both at a national and international level. The care in the selection of the components and the great accuracy of processes guarantee the longevity of the motovibrator with few extremely simple maintenance steps.

SYMBOLS

This symbol indicates extremely dangerous situations that, if neglected, can seriously put the health and safety of people at risk.

1.1 - PURPOSE AND IMPORTANCE OF THE MANUAL

This manual, written by the manufacturer, is an integral part of the supply of the electric motovibrator. As such, it must strictly follow the electric motovibrator up to its dismantling and be easily retrievable for quick consultation by operators concerned and the site manager. In the event of a change of ownership of the electric motovibrator, the manual must be handed over to the new owner. Before performing any operation with or on the electric motovibrator, personnel concerned must carefully read this manual. If the manual is lost, creased or is no longer fully readable, download a new copy from the OLI® website and check the date of the latest update. This manual provides warnings and instructions relating to safety instructions to prevent accidents at work. Anyway and in any case, the various operators must carefully follow the safety standards required by current regulations.
Any changes to the safety standards that may occur in the meantime must be adopted and implemented.
The constantly updated version of this catalogue is available at www.olivibra.com

1.2 - DESCRIPTION

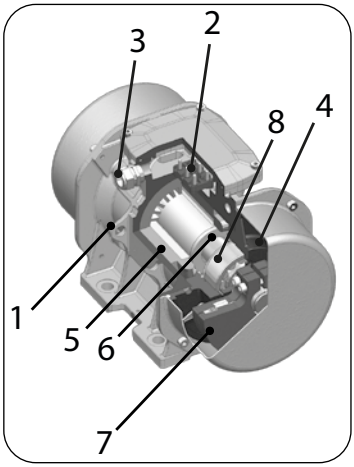

Pos.	Description
1	Vibrator Body
2	Terminal board
3	Cable gland
4	Bearing-holder flange
5	Stator
6	Rotor shaft
7	Weights
8	Bearing

MVE motovibrators are designed and built in accordance with the following directives and regulations:

- directive 2014/34/EU in accordance with category 2D and directive 2006/42/EC
- regulations UL 1004-1,UL 1004-3, UL60079-31, UL60079-0,IEC 60034-1, IEC EN 60079-0, IEC EN 60079-31, CSA 60079-0, CSA 60079-31, CSA 22.2 NO.100, CSA 22.2 NO.77

The general features of motovibrators of the MVE series are listed here below:

- Insulation class F
- Tropicalisation as standard
- IP66 protection rating.
- Operating temperature from:
  - J - Amb.Temp. -20/+40°C
  - H - Amb.Temp. -20/+55°C
  - E - Amb.Temp. -20/+40°C

1.3 - NOMENCLATURE

Certification	
J	II2 D Ex tb IIIC Tx Db IP66 Ex tb IIIC Tx Db IP66 T.Amb -20/+40°C
H	II2 D Ex tb IIIC Tx Db IP66 Ex tb IIIC Tx Db IP66 T.Amb -20/+55°C
E	II2 D Ex tb IIIC Tx Db IP66 Ex tb IIIC Tx Db IP66 Class II Div 2 Group F,G T4 Ex tb IIIC Tx Db IP66 T.Amb -20/+40°C

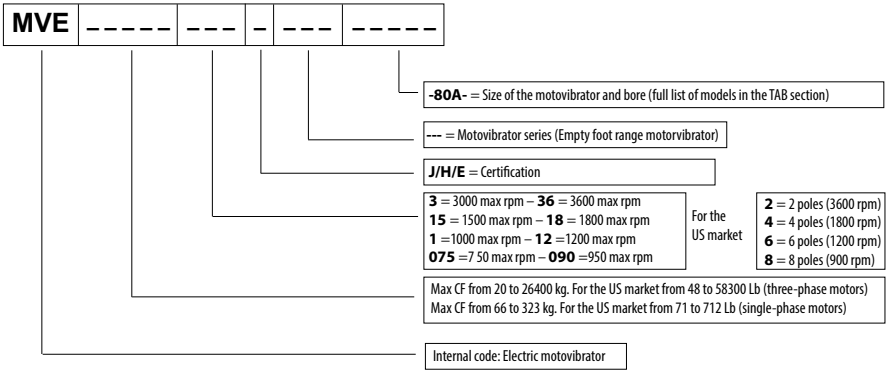

EN

1.4 - OPERATING INSTRUCTIONS

Do not tamper with the machine with any device to obtain performance levels that differ from those in the project.
Any unauthorised change can affect the health of people, as well as compromise the integrity of the machine itself.
Operators must only wear protective clothing and be equipped with personal protective equipment suitable for carrying out operations and required by the safety and accident-prevention standards.
Before use, make sure that all safety devices have been installed and are in good working order.
Only authorised personnel must access the work area during operation.
Remove any obstacles or sources of danger from the operating area.
Connect the vibrator to the power supply by means of cables that have an operating temperature matching the value reported on the rating plate of the motovibrator or on the warning label.
MVE motovibrators are supplied with cable glands compliant with directive 2014/34/EU according to category 2D with an IP66 protection rating.
If they need to be replaced, use cable glands with the same characteristics.
The motovibrator described in this manual has been designed and tested for use in potentially explosive areas classified as:

- Zone 21 in accordance with IEC 60079-10-2, CEC.CSA C22.1 art.18 and in accordance with ATEX directive 2014/34/EU.
- Class II DIV.2 in accordance with NEC article 500.5 of the National Electrical Code.

The user must ensure that the workplace where the motovibrator will be installed has been suitably made safe against explosion hazards.
At the time of order the client must specify the characteristics of the powders to be treated and the process temperatures as well.

IMPORTANT: the ATEX version of the motovibrator is designed to operate with powders that do not release explosive gases during the processing
FOLLOW THE INDICATIONS REPORTED ON THE RATING PLATE: D = dust (group IIIC)
To ensure you operate under safe conditions ensure that:

- **The processed powders have an ignition temperature 75K higher than the surface temperature indicated on the rating plate of the motovibrator (IEC 60079-10-2).**
- **For the Class II Div.2 certification, the rating plate specifies the dust groups (F, G) and the operating temperature class (NEC 500.8).**

(The maximum temperatures indicated in this manual and on the rating plate of the motovibrators have been calculated without considering the presence of any layers of dust deposited on the surfaces).

The electric vibrator must be installed with enough space to carry out normal assembly/disassembly, cleaning and maintenance operations.

CONTRAINDICATIONS FOR USE

There is no contraindication for use if the usual precautions for this kind of product are followed, along with the instructions in this manual.

It is also forbidden to operate the motovibrator before the machine/plant has been declared compliant with the provisions of directive 2006/42/EC

In this regard, the plant/engineer installer is required to set up and install all the devices/protections in order to avoid damage to property or injury to people in case of failures and subsequent fall of pieces.

1.5 – WARNINGS

Before going ahead with the installation of the electric motovibrator, the plant engineer/installer must check if the ordered model matches the model owned (values reported on the rating plate) and that it has not undergone damage during transport or has any faults.
The electric motovibrator must be installed in accordance with the instructions of this manual by the plant engineer/installer, who must take care of the following: operating test, adjustment and check to ensure it is positioned correctly. Any disassembly and assembly of parts of the electric motovibrator must be carried out only for the purposes of maintenance or cleaning and can be carried out only be qualified personnel authorised for these operations. The necessary instructions for the assembly and disassembly of some parts of the electric motovibrator are enclosed with the user manual.

Before conducting any work on the electric motovibrator, ensure it has been made safe.

IMPORTANT: later in this manual we will use the sentence "ensure the electric motovibrator and the equipment on which it is installed are safe" for the following operations:

- **Before carrying out any maintenance, ensure the machine is safe, as operating inside the terminal board box of the electric motovibrator is dangerous. This means the power supply must be turned off via the master switch.**

PLEASE NOTE Do not intervene on the electric motovibrator itself during the operation of the equipment on which the electric motovibrator is installed (e.g. vibrating bottom, sieve, etc.). If the equipment is controlled from a main panel, the latter must have a safety key to prevent accidental start-ups and the key must be held by the person conducting maintenance.

Ensure the area around the electric motovibrator is lit correctly (if necessary, give operators suitable electric lamps for:

- Zone 21 cat. II 2 D for ATEX and IECEX environments, C22.1 art.18 CEC.
- Class II Div.2 (NEC 500.5)

Before conducting work on the electric motovibrator, carefully remove the layers of dust settled on it by only using a damp cloth, whilst making sure you do not spread the dust around. For any operation to be carried on the electric motovibrator (maintenance and cleaning), operators must have the designated personal protective equipment (PPE):

- Antistatic safety footwear (certified)
- Antistatic protective clothing (certified)
- Antistatic cut-resistant gloves
- Protective masks
- Protective goggles

All the electrical equipment that might be used for maintenance or cleaning on the outside of the electric motovibrator must be certified:

- Zone 21 for ATEX IECEX environments, C22.1 art.18 CEC.
- Class II Div.2 (NEC 500.5)

THE USE OF THE MOTOVIBRATOR IN POTENTIALLY EXPLOSIVE ATMOSPHERES VIA A PWM INVERTER IS ALLOWED IN A FREQUENCY RANGE FROM 20Hz TO THE FREQUENCY ON THE RATING PLATE.

FOR ETL CERTIFICATION MAY BE USED WITH PWM INVERTER ONLY AFTER ASSESSMENT OF THE MOTORS ON THE PLANT.

MOTOVIBRATORS FROM SIZE 60 TO 110 ARE FITTED WITH A PTC 130°C THERMISTOR. DESIGNATED CONTROL INSTRUMENTS GUARANTEE THE MOTOVIBRATOR STOPS IF THE LIMIT VALUES ARE REACHED AND THE INTERVENTION MUST BE "FAIL SAFE" (REDUNDANT). THE APPLICATION OF THE THERMISTORS FOR THESE USES MUST BE STRICTLY REQUIRED AT THE TIME OF ORDER. THE APPLICATION OF THERMISTORS BY COMPANIES NOT CREDITED BY OLI S.p.A. RELIEVES THE MANUFACTURER FROM ANY RESPONSIBILITY.

1.6 - WARRANTY

OLI® S.p.A. grants a 24-month warranty on the products it manufactures. The period starts from the date on the transport document. The warranty does not apply to failures and/or defects caused by incorrect installation or use, or by incorrect maintenance or modifications made without the authorisation of the manufacturer.

Namely, the warranty and the compliance with regulations become null and void if the electric motovibrator:

- Is tampered with or modified.
- Is used incorrectly.
- Is used by not following the limits specified in this manual and/or is subjected to excessive mechanical stress.
- Has not undergone the necessary maintenance or if it has been carried out only in part and/or not correctly or by personnel not trained correctly
- Has suffered damage due to neglect during transport, installation and use.
- Non-original spare parts have been inserted.

Upon receipt of the product, the recipient must ensure it does not have any faults or damage due to transport and/or incompleteness of the supply. Any defects, damage or incompleteness shall be immediately reported to the manufacturer in writing with a countersignature of the carrier.

Products returned for repairs under the warranty must be sent FOB to our plant.

1.7 - STORAGE

1) STORAGE BEFORE INSTALLATION

- Avoid damp and brackish environments wherever possible.
- Place the electric motovibrator on wooden platforms and away from the elements (do not stack it).
- Storage outdoors or in the areas where vapours or substances not compatible with the materials used to build the electric motovibrator (also poorly corrosive substances) is prohibited.
- Avoid storage conditions below -20°C.

2) PROLONGED MACHINE INACTIVITY AFTER ASSEMBLY

Before putting the machine into service:

- Ensure the electric motovibrator is safe.
- Ensure all the parts for which prolonged inactivity can affect operation are intact.

3) POSSIBLE RESTART AFTER A PERIOD OF INACTIVITY

- Avoid damp and brackish environments when storing the vibrator.
- Place the electric motovibrator on wooden platforms and away from the elements.
- Storage outdoors or in the areas where vapours or substances not compatible with the materials used to build the electric motovibrator (also poorly corrosive substances) is prohibited.

Before putting the machine into service:

- ensure the electric motovibrator is safe.
- Ensure parts for which prolonged inactivity can affect operation are intact.
- perform a full cleaning cycle in accordance with the safety data sheet of the dust processed by the system.

If the electric motovibrator operates under different conditions and with different materials, check if this use is compatible with the instructions reported in section 1.3 - OPERATING INSTRUCTIONS.

OLI

INSTALLATION, USE AND MAINTENANCE

2

EN

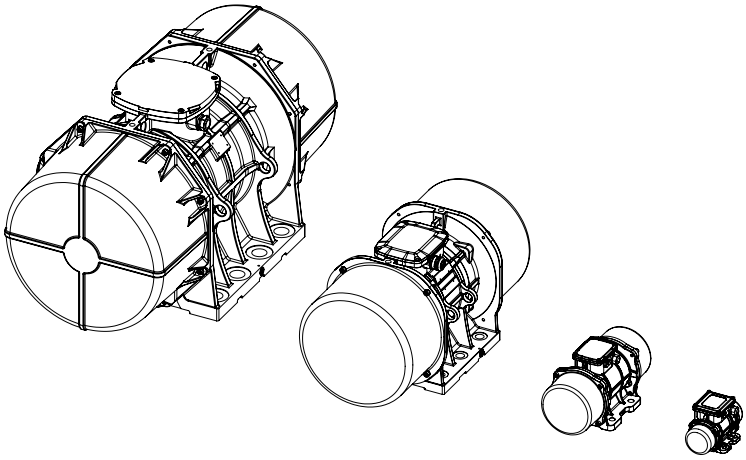

MVE

Serie J:

II2 D Ex tb IIIC Tx Db IP66

Ex tb IIIC Tx Db IP66
T.Amb -20/+40°C

Serie H:

II2 D Ex tb IIIC Tx Db IP66

Ex tb IIIC Tx Db IP66
T.Amb -20/+55°C

Serie E:

II2 D Ex tb IIIC Tx Db IP66

Ex tb IIIC Tx Db IP66

Class II Div 2 Group F,G T4
Ex tb IIIC Tx Db IP66
T.Amb -20/+40°C

2.1 IDENTIFICATION

MACHINE IDENTIFICATION

To make sure the vibrator is identified correctly, refer to the serial number on the order confirmation, on the invoice and on the rating plate on the vibrator itself. The motovibrator model and other data are stamped on the designated identification plate. (Fig.2) This data must always be specified for any requests for spare parts and technical support.

SERIES: E

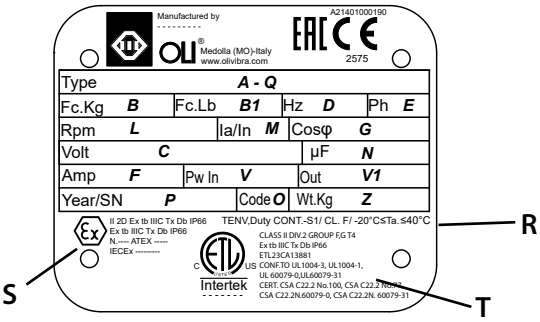

A	Model
B	Centrifugal force in kg
B1	Centrifugal force in lb
C	Voltage
D	Frequency
E	Phases
F	Current
G	Cos φ
L	RPM
M	Ia/In ratio
N	Capacitor
O	Locked rotor code (kVA)
P	Year / Serial number
Q	Motor size
R	Ambient temperature
S	ATEX certification
T	ETL certification
V	Power in (kW or HP)
V1	Power out (kW or HP)
Z	Weight kg

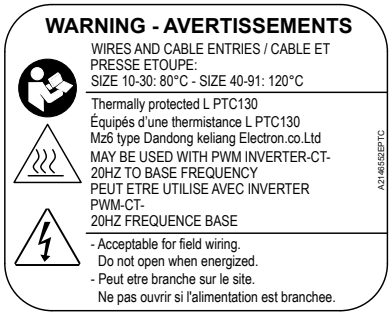

Size	Amb.Temp. -20°C/+40°C	Amb.Temp. -20°C/+55°C
	Tx	Tx
10-30	100°C	115°C
40-91	135°C	150°C
100-110	105°C	/

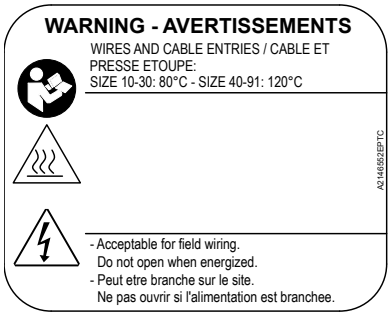

Fig.2

EN

EN

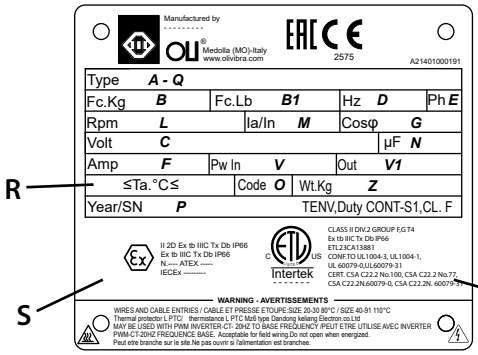
Manufactured by
OLI
Medolla (MO)-Italy
www.olivibra.com
2575
A21401000191
Type A - Q
Fc.Kg B
Fc.Lb B1
Hz D
Ph E
Rpm L
Ia/In M
Cosφ G
Volt C
µF N
Amp F
Pw In V
Out V1
≤Ta.°C≤
Code O
Wt.Kg Z
Year/SN P
TENV,Duty CONT-S1,CL. F
II 2D Ex tb IIIC Tx Db IP66
Ex tb IIIC Tx Db IP66
N.---- ATEX -----
IECEx ----------
Intertek
CLASS II DIV.2 GROUP F,G T4
Ex tb IIIC Tx Db IP66
ETL23CA13881
CONFTO UL1004-3, UL1004-1,
UL 60079-0,UL60079-31
CERT. CSA C22.2 No.100, CSA C22.2 No.77,
CSA C22.2N.60079-0, CSA C22.2N. 60079-31
WARNING - AVERTISSEMENTS
WIRES AND CABLE ENTRIES / CABLE ET PRESSE ETOUPE:SIZE 20-30 80°C / SIZE 40-91 110°C
Thermal protector L PTC/ thermistance L PTC Mz6 type Dandong keliang Electron.co.Ltd
MAY BE USED WITH PWM INVERTER-CT- 20HZ TO BASE FREQUENCY /PEUT ETRE UTILISE AVEC INVERTER
PWM-CT-20HZ FREQUENCE BASE. Acceptable for field wiring.Do not open when energized.
Peut etre branche sur le site.Ne pas ouvrir si l'alimentation est branchee.
R
S
T

SERIES: J

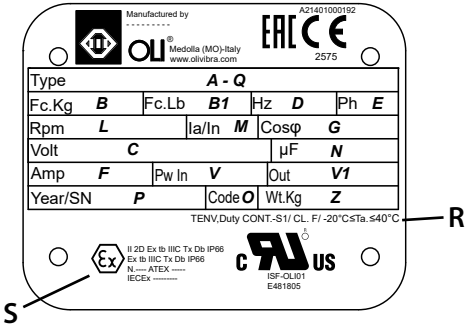
Manufactured by
OLI
Medolla (MO)-Italy
www.olivibra.com
2575
A21401000192
Type A - Q
Fc.Kg B
Fc.Lb B1
Hz D
Ph E
Rpm L
Ia/In M
Cosφ G
Volt C
µF N
Amp F
Pw In V
Out V1
Year/SN P
Code O
Wt.Kg Z
TENV,Duty CONT.-S1/ CL. F/ -20°C≤Ta.≤40°C
II 2D Ex tb IIIC Tx Db IP66
Ex tb IIIC Tx Db IP66
N.---- ATEX -----
IECEx ----------
ISF-OLI01
E481805
R
S

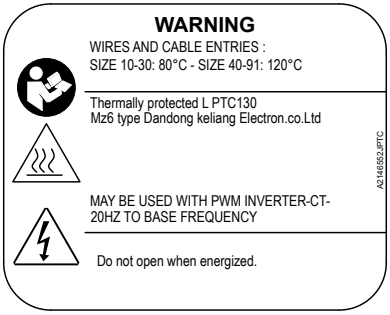
WARNING
WIRES AND CABLE ENTRIES :
SIZE 10-30: 80°C - SIZE 40-91: 120°C
Thermally protected L PTC130
Mz6 type Dandong keliang Electron.co.Ltd
MAY BE USED WITH PWM INVERTER-CT-
20HZ TO BASE FREQUENCY
Do not open when energized.
A21405512_PTC

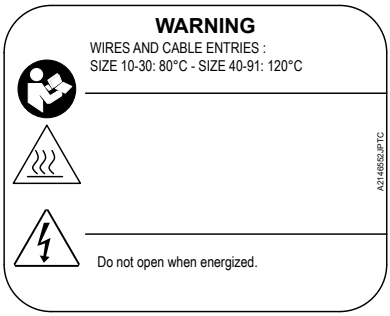
WARNING
WIRES AND CABLE ENTRIES :
SIZE 10-30: 80°C - SIZE 40-91: 120°C
A21146152-PTC
Do not open when energized.

EN

SERIES: H

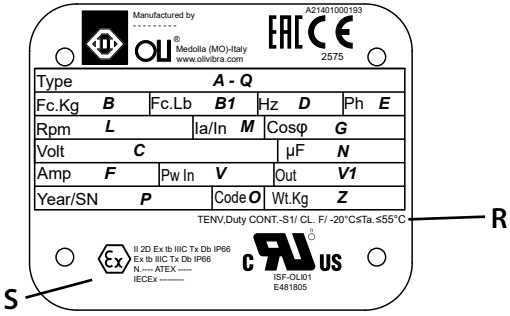
Manufactured by
OLI
Medolla (MO)-Italy
www.olivibra.com
A21401000193
2575
Type A - Q
Fc.Kg B
Fc.Lb B1
Hz D
Ph E
Rpm L
Ia/In M
Cosφ G
Volt C
µF N
Amp F
Pw In V
Out V1
Year/SN P
Code O
Wt.Kg Z
TENV,Duty CONT.-S1/ CL. F/ -20°C≤Ta.≤55°C
R
S
II 2D Ex tb IIIC Tx Db IP66
Ex tb IIIC Tx Db IP66
N ---- ATEX ----
IECEx ----------
ISF-OLI01
E481805

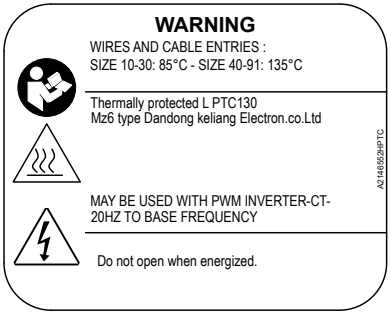
WARNING
WIRES AND CABLE ENTRIES :
SIZE 10-30: 85°C - SIZE 40-91: 135°C
Thermally protected L PTC130
Mz6 type Dandong keliang Electron.co.Ltd
A21146529-PTC
MAY BE USED WITH PWM INVERTER-CT-
20HZ TO BASE FREQUENCY
Do not open when energized.

EN

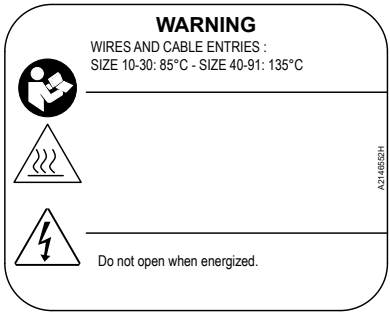

SERIES: J-H SIZE 60-91

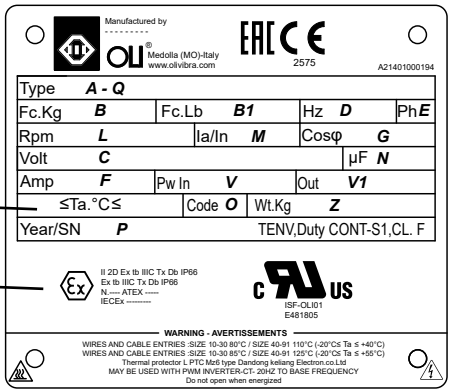

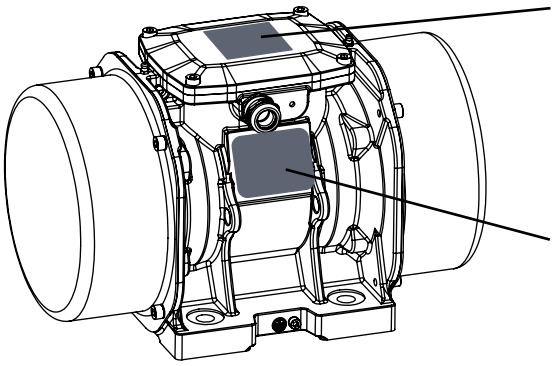

EN

2.2 - TRANSPORT AND PACKAGING

SAFETY RECOMMENDATIONS FOR TRANSPORT AND HANDLING

Carry out all the handling and transport operations according to the procedures and instructions shown on the packaging and the supplied manual (page TAB.190 - page TAB.191).
All operations must be carried out by qualified and authorised personnel.
Persons authorised to carry out handling operations must have specific skills and experience and implement all necessary measures to ensure their safety and that of persons directly involved.
The choice of lifting and handling equipment (cranes, gantries, forklifts, etc.) must take into account the weight to be moved, the size and gripping points.
Only accessories such as eyebolts, hooks, shackles, spring catches, bands, slings, chains, ropes, etc. certified and suitable for the weight to be lifted are to be used during lifting stages.
During the handling stages, comply with the requirements applicable to the handling of the loads.
Keep the set-up of the machine or of the sections and loose components horizontal. Keep the load low and slowly perform all the necessary movements.
Avoid abrupt, dangerous oscillations and rotations. If necessary manually accompany the movement and gently place the load on the ground.

CHECKS BEFORE SHIPMENT

Avoid any kind of damage during unloading and handling. To this end, lift the packaging as indicated in the following manual (page TAB.190 - page TAB.191). DO NOT PUSH OR DRAG the electric motovibrator! Bear in mind that this is mechanical/electric material that must to be handled with care.
As an anchorage mode during transport, the packaging of the motovibrator must be firmly anchored to the loading platform of the vehicle to prevent movements and collisions that might damage some parts. Moreover, the loading platform must be clear of any free bodies that might damage them due to shocks.
Upon receipt of the goods, check whether the type and quantity match to the information in the order confirmation.
Any damage must be immediately reported in writing in the designated area of the consignment note. The driver is required to accept this complaint and leave a copy of it with you. If the supply is FOB, send your complaint to the manufacturer or, otherwise, directly to the shipping agent.
If you do not claim damages immediately upon arrival of the goods, your request might be rejected.
The installer is responsible for suitably disposing of the packaging in accordance with applicable laws in force.

2.3 - INSTALLATION

The user must ensure that the system inside which the electric motovibrator will be installed has been suitably made safe against explosion hazards before it is started and that the "document on protection against explosions" has been prepared as set forth by ATEX directive 2014/34/EU.
-The machine does not need any particular lighting. However, the machine installer is required to ensure uniform lighting in the area according to the relevant regulations.

EN

THE MOTOVIBRATOR MUST BE INSTALLED BY SPECIALISED PERSONNEL ONLY.

Before installation, especially if the appliance has been stored in the warehouse for a long time (more than 24 months), we recommend removing one of the side protection covers of the weights and checking that the shaft rotates smoothly.
Also check the insulation of the motor by means of a "Stiffness Test" at about 2 KV for no more than 5 seconds between each phase and 10 seconds between the phase and the earth. (Fig.3)
Contact the manufacturer if you detect any faults.
The MVE motovibrator can be installed in any position. We recommend fastening the vibrator to a rigid area to prevent the induced vibrations from causing failures or cracking. If this is not possible, reinforcement plates and ribs must be used **.** Cutting and welding procedures must be carried out by qualified personnel. Suitable Hot-Works procedures (such as cutting, welding, etc.) and LOTO – lockout/tagout: procedure to disconnect the machine (electrical and mechanical segregation) must be applied to safely install the electric vibrator. The authorisation to perform the hot works must be given by specialised technical personnel with training on the risk of an explosion due to dust (who can check the residual risk, suitability of the tools and have knowledge of procedures).
The connection surface must be flat (max 0.25 mm/max 0.01 in.), so that the feet of the vibrator rest evenly and perfectly adhere to the fastening surface to avoid internal tension that can lead to breakage of the motovibrator feet (Fig.4-4a-4b-5).
To secure the motovibrator, use bolts (8.8), nuts (8.8) and flat washers cat. A EN ISO 7089 / 7092 as specified in the table of the TAB section from page TAB.166 to page TAB.173
Use a torque wrench set in accordance with the tables in the TAB section from page TAB.166 to page TAB.173
Bear in mind that most failures are due to fastenings and tightenings that have not been performed correctly.
Anchor the motovibrator with a chain whose length and section can hold up the motovibrator with a maximum fall of 15 cm (6 inches) in the event of an accidental detachment. (Fig.6)

Check before starting the equipment and after the first 24 hours of operation:
- The motovibrator fixing bolts and welds of the reinforcement plates and ribs.
- The anchoring cable or chain.
- The power supply cable.

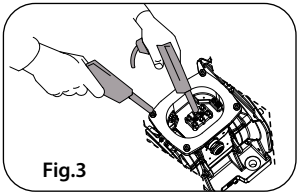
Fig.3

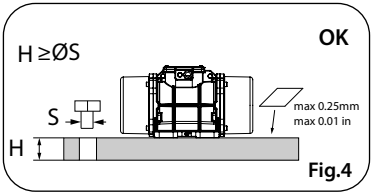

Fig.4

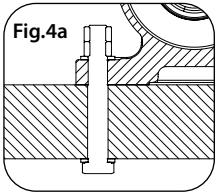
Fig.4a

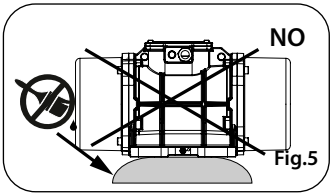

Fig.5

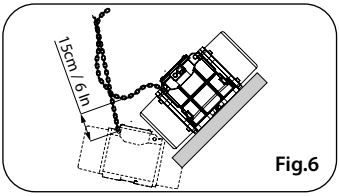

Fig.6

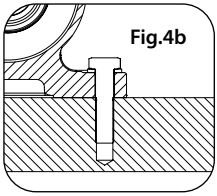
Fig.4b

2.4 - ELECTRICAL CONNECTIONS

THE ELECTRICAL CONNECTION MUST BE CARRIED OUT BY QUALIFIED PERSONNEL ONLY ACCORDING TO EN/IEC 60079-14 AND WITH THE POWER OFF.
THE EARTHING CONNECTION IS MANDATORY.

The power mains and the connection of the motovibrators must comply with current safety standards established by the relevant authorities of the place where the activity is carried out.
Make sure the mains voltage matches the value reported on the rating plate on the motovibrator. Disconnect the line before conducting any maintenance or when adjusting the weights.
For single-phase motovibrators wait at least one minute before opening the box with the electrical connections to let the capacitor discharge. Any repair or replacement of components must only be carried out by qualified personnel only.
For single-phase motovibrators check that the capacitor used matches the data on the rating plate. It is always a good idea to provide for the connection of the capacitor in a safe or non-classified area. If this is not possible, ensure the capacitor complies with:

- For the ATEX IECEX II 2D certification: ATEX II 2D (Directive 2014/34/EU), C22.1 art.18 CEC.
- For the Class II certification (Div.2): Class II Div.2 (NEC 500.5)

Use a flexible power supply cable with 4 conductors, one of which must be yellow-green (only green for the US) and used for earthing purposes. When connecting the motovibrator to the line, the yellow-green earth cable (only green in the US) must always be longer to prevent it from breaking first in the event of a failure.
The connection elements for the earthing and for the equipotential connection (Fig.7) must allow for the effective connection of at least one conductor, whose cross-section must match the value reported in the table below. Motovibrators from size 60 to size 110 are fitted with PTC 130°C thermistors. For the connection refer to diagrams M52 and M53. The protector model and other data are stamped on the designated warning label on the vibrator itself.

If the cable gland is replaced(entries 1, and 2 on request Fig.11); the new one used MUST comply with the certification level reported on the rating plate of the motovibrator. For dimension and type refer to the TAB sec.

As well as complying with these requirements, the earthing connection elements and those for the equipotential connection, located outside the electrical structure must allow for the effective connection of a conductor measuring at least 4 mm^2.

Area with a cross-section of the phase conductors of the installation S mm^2	Area with a cross-section of the corresponding protective conductor S mm^2
$S \leq 16$	S
$16 < S \leq 35$	16
$S > 35$	0.5S

FASTENING THE POWER SUPPLY CABLE TO THE TERMINAL BOARD

- Insert the power supply cable through the cable gland (Fig.8). The cable ends must be in the shape of a loop, pre-insulated and with a hole suitable to the pins of the terminal board. We recommend using conductors of a suitable cross-section to avoid overheating. Ensure there are no frayed parts that can cause a short-circuit. (Fig.9) The cable to be used depending on the model is shown in the tables in the TAB section.
- The power supply cables must be contained in sponge cable ties. (Fig.9a)
- The connection to the terminal board must be carried out following the designated diagrams on page M.51 and in any case by always following the specific diagram depending on the model inside the terminal board cover.
- Position the designated washers before the nuts, to prevent any loosening of the nuts themselves. (Fig.10)
- The nuts of the pins must be tightened to the torque reported in the table (Fig.7 page M.51).
- Remember to fasten the earthing cable (mandatory connection). ⚠
- Close the cover by placing the O-ring/gasket in-between.
- Tighten the cable gland so as to perfectly lock the power supply cable into place. (Fig.11) The tightening torque depends on the type of cable used. The installer shall determine the right tightening torque as required. Incorrect tightening can alter the IP protection level. ⚠

EN

RUNNING WITH INVERTER

MVE MOTORVIBRATORS ARE SUITABLE FOR USE ONLY WITH PWM INVERTER

Motorvibrator can be used from a variable frenquency from 20 Hz to base frequency.

The inverter supplies the motor at variable voltage U and frequency f by keeping constant the U/f ratio (which can be calculated with the values on name plate). For U ≤ U mains, with constant U/f, motor changes its speed in proportion to frequency f and absorbs a current I ≈ IN.

Fig.8

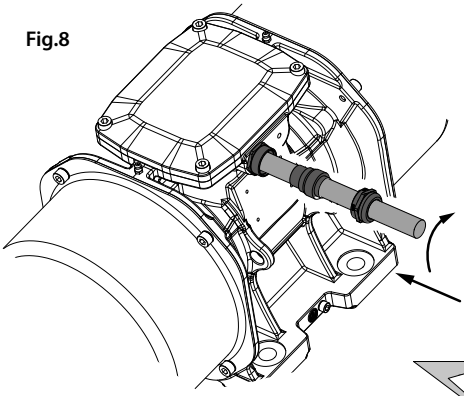

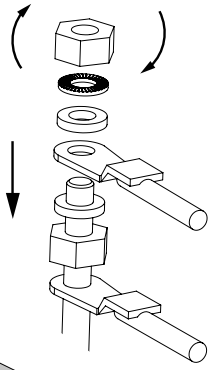

Fig.10

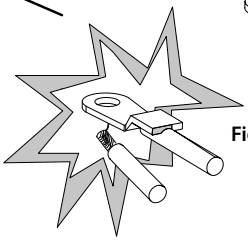

Fig.9

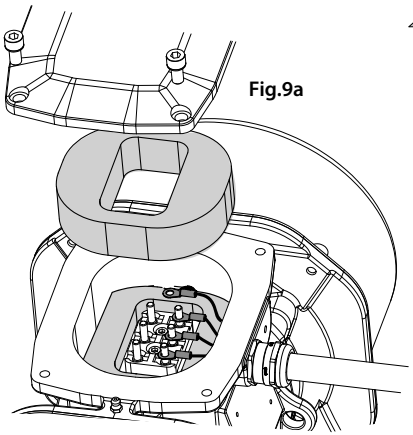

Fig.9a

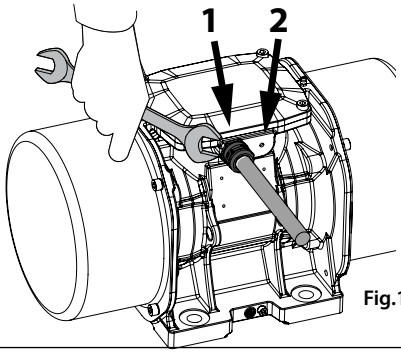

Fig.11

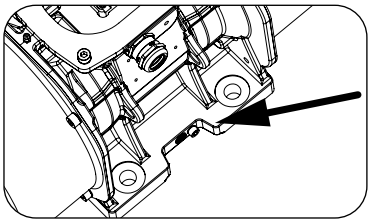

Equipotential connection/Ground connection
Screw - ISO4762 - DIN912
M5 - GALVANIZED
M6 - GALVANIZED

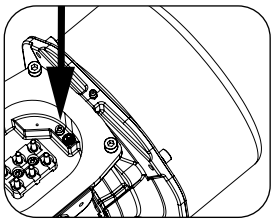

Tightening torques of the terminal board nuts/screws		
screw	**Nm**	**ft*lb**
M5	4	2.95
M6	5	3.69

Cable gland clamping	
Cable gland	**Cable Clamping Ø (mm)**
M16	5-10
M20	7-13
M25	10-16
M32	13-20

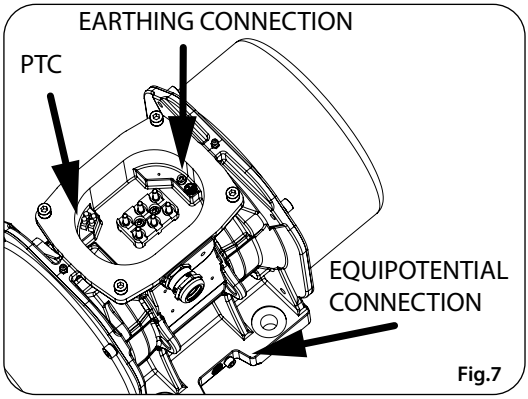

Fig.7

EN

3 PH

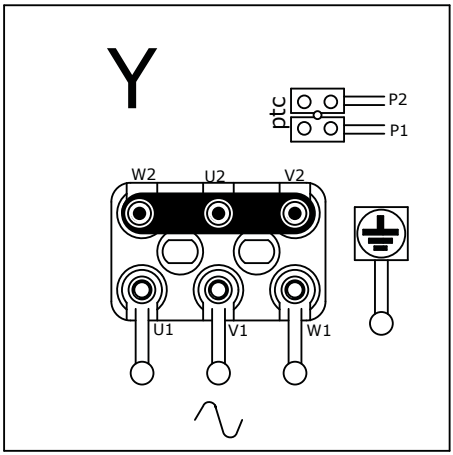

3 PH

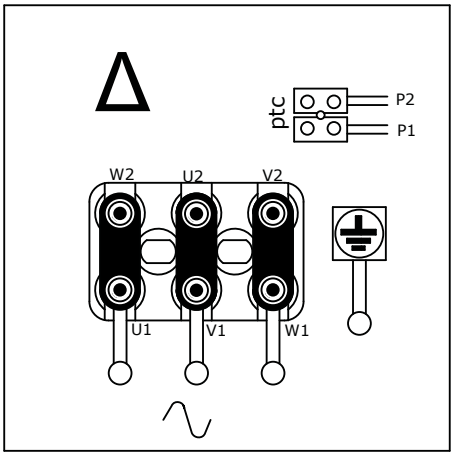

1 PH

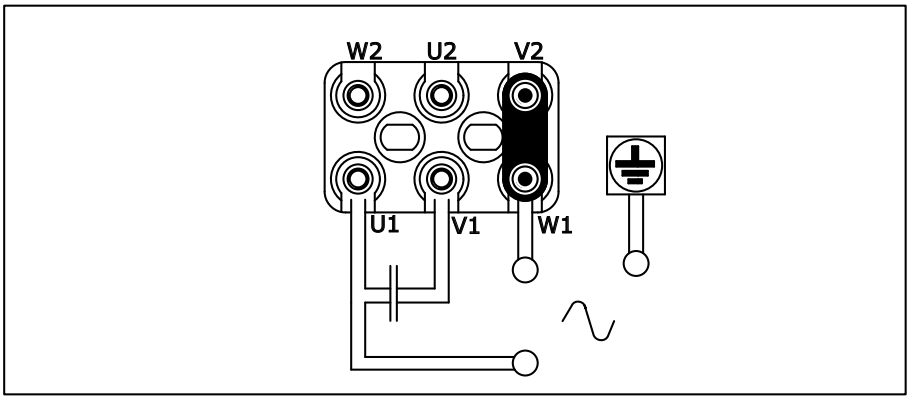

ELECTRICAL CONNECTION WITH THERMAL PROTECTION

EN

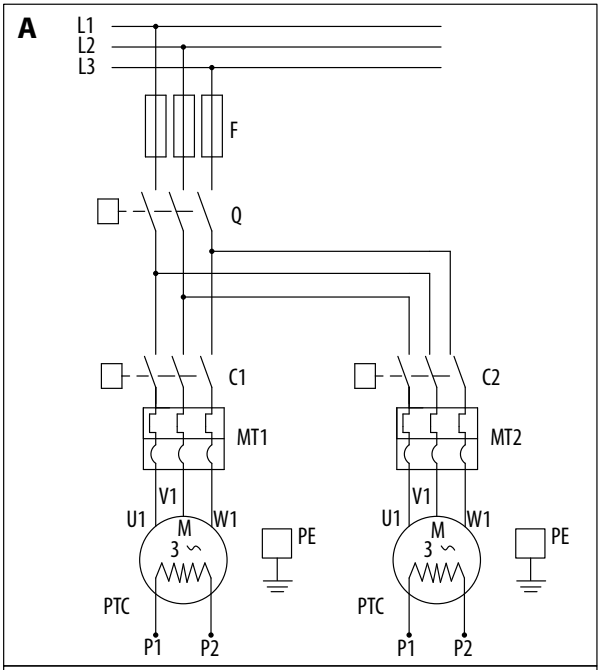

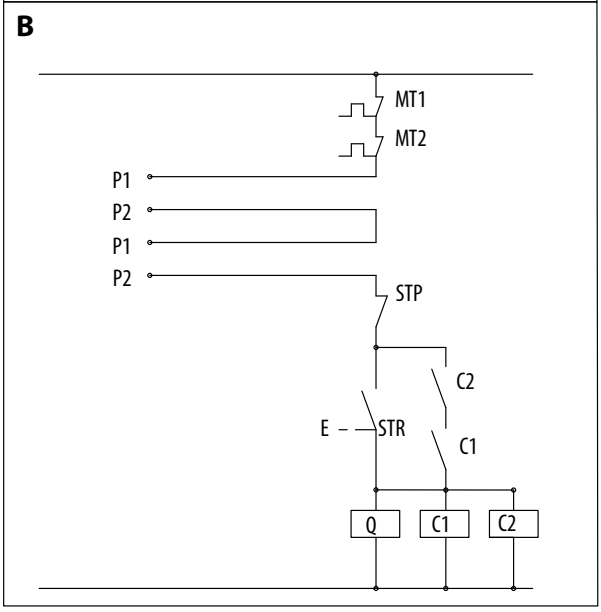

KEY
MT1= Switch guard for motor 1
MT2= Switch guard for motor 2
C1= Motor 1 contactor
C2= Motor 2 contactor
PE= Earth connection
Q= Master switch
F= Fuses
PTC= PTC
E1-E2= Motor 1 / motor 2 thermistor control equipment
STP= Stop button
STR= Start Button

ELECTRICAL CONNECTION WITH PTC THERMISTORS

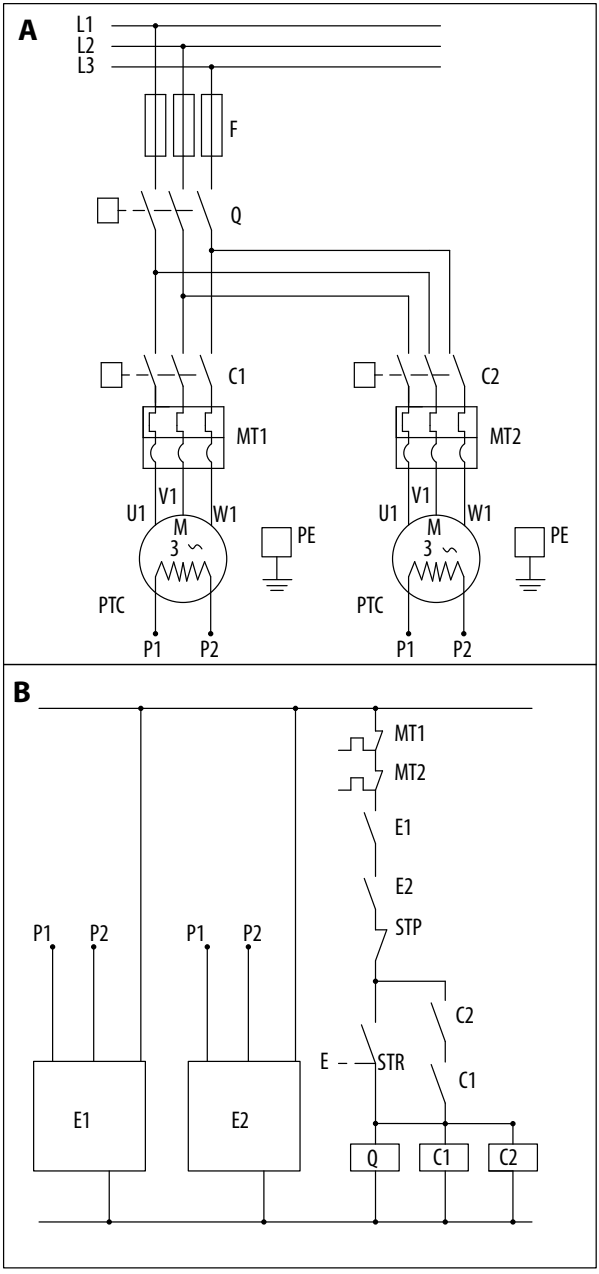

KEY
MT1= Switch guard for motor 1
MT2= Switch guard for motor 2
C1= Motor 1 contactor
C2= Motor 2 contactor
PE= Earth connection
Q= Master switch
F= Fuses
PTC= PTC
E1-E2= Motor 1 / motor 2 thermistor control equipment
STP= Stop button
STR= Start Button

EN

EN

THE ELECTRICAL CONNECTION MUST BE CARRIED OUT BY QUALIFIED PERSONNEL ONLY AND WITH THE POWER OFF.

Ensure the voltage and frequency match the values on the identification plate of the motovibrator.
All the motovibrators must be connected to a suitable external overload protection, except for the motors of the MICRO MVE series, as even if there is an event that causes a block of the rotor, the motor temperature does not exceed the value envisaged in regulation EN 60034-1 par. 8.10.1 Tab. 7 When a pair of motovibrators is installed, each of them must be provided with its own external overload protection, which in turn must be interlocked together to prevent the operation of just one motovibrator if the other one accidentally stops. Always use delayed tripping circuit breakers to prevent them from being triggered upon start-up, when a large amount of absorbed current can reach high levels (especially if the temperatures are low).
Overload protection NOT GREATER than 10% compared to the values on the data plate or the warranty will become null and void!
All the electrical components that the installer will insert in the electric motovibrator (e.g. overload protections, sensors) must be compliant:

- For the ATEX IECEX II 2D certification: with ATEX directive 2014/34/EU, II 2D or a higher one
- For the north America certification: Art. 500 NEC, Art. C22.1 CEC

For the equipotential connection of the motovibrator, earth the machine by using the designated terminal on the casing (Fig.7).
NOTE: Ensure the terminal board cover gasket is positioned correctly, as an incorrect positioning might alter the IP protection rating

2.5 - ADJUSTING THE VIBRATION INTENSITY

This operation must only be carried out by qualified personnel and with the power off.

- Remove the side covers by undoing the screws and washers.
- Unscrew the clamping screw of the movable exposed conductive part (for Size 10 and MICRO MVE unscrew the clamping nut on the shaft).
- Bring the eccentric weights to the desired value as shown in the TAB section, pages from TAB.183 to TAB.186
- The weights must be imperatively set in the same direction on the two ends (see Fig.1).
- Once the weights are brought to the desired value, tighten the clamping screw (clamping nut for Size 10 and MICRO) by using a torque wrench.

CAUTION: Make sure no-one can touch or be hit by the rotating weights.

- If it is necessary to reverse the direction of rotation, use the terminal board connections after powering off the motovibrator.
- After performing the operation on both sides, refit the covers with the same screws and washers, making sure that the (OR) gaskets are correctly positioned in their housings.
- For the tightening torques, see the TAB section page from TAB.188 to TAB.189.

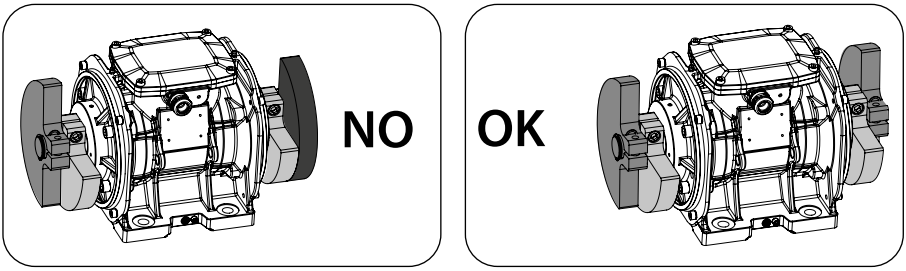

Fig.1

2.6 - START-UP PROCEDURE

Ensure the electric motovibrator and the equipment to which it is connected are safe.
The operation must only be carried out by qualified staff.
Power off the motovibrator during the disassembly and reassembly of the protective parts (covers, weights and terminal board cover).

Absorbed current check:

- Power on the motovibrator and use an amperometric clamp on all the phases to ensure the absorption does not exceed the value reported on the rating plate. Otherwise, make sure the structure or elastic system on which the motovibrator is applied has been in turn applied correctly.
- Never touch the motovibrator during operation.
- Never start the motovibrator without the protection covers of the weights and the terminal board cover.
- After a short period of operation, check again the tightening of the motovibrator fastening elements to the structure.

2.7 - LIMITS OF USE

COMPLY WITH THE VALUES REPORTED ON THE RATING PLATE OF THE MOTOVIBRATOR.
The weighted equivalent continuous sound pressure level of the motovibrators NEVER exceeds 76 dB(A)*
*Measurement carried out under normal operating conditions according to ISO 6081/86, with a simulated load consisting of a spring-mounted iron bench.
** Motovibrators equipped with bearings from NJ2320 to NJ2330 with a brass cage can be noisier.
However, the manufacturer of the machine inside which the motovibrator is incorporated is required to carry out final noise level measurements on the system or finishing machinery. Likewise, the employer MUST carry out the noise level measurements in the work environment where the system or machinery inside which the motovibrator is incorporated is installed. These measurements must be taken before the system is started up. It is also mandatory to use adequate personal protection and training equipment, as per Legislative Decree no. 81 of 9 April 2008.

ALONG WITH THE ABOVE, COMPLY WITH THE STANDARDS IN FORCE IN THE COUNTRY WHERE YOU OPERATE.
The temperature of the environment where the machine operates is:

Certification	
J	II2 D Ex tb IIIC Tx Db IP66 Ex tb IIIC Tx Db IP66 T.Amb -20/+40°C
H	II2 D Ex tb IIIC Tx Db IP66 Ex tb IIIC Tx Db IP66 T.Amb -20/+55°C
E	II2 D Ex tb IIIC Tx Db IP66 Ex tb IIIC Tx Db IP66 Class II Div 2 Group F,G T4 Ex tb IIIC Tx Db IP66 T.Amb -20/+40°C

The user is responsible for complying with regulations related to workplaces with an explosion hazard due to the presence of combustible powders

- IEC 60079-10-2
- NEC 500.5
- CEC C22.1

EN

⚠ 2.8 - MAINTENANCE ⚠

Follow the standards relating to connections and the use of electrical equipment in potentially explosive atmospheres. The motovibrators must be handled, installed, put into service, inspected, maintained, repaired and, if necessary, dismantled only by qualified and trained personnel in accordance with the above regulations. These operations must always be carried out in the absence of potentially explosive atmospheres.

Before carrying out any maintenance work, ensure the electric motovibrator and the equipment to which it is connected are safe.

MAINTENANCE MUST BE CARRIED OUT BY QUALIFIED PERSONNEL ONLY AND WITH THE POWER OFF.

Before performing any work, check that the temperature of the motovibrator does not exceed 55°C.

SPECIAL FEATURES

The machine is set up for the equipotential connection to the earthing network.

LUBRICATION

All OLI motovibrators can be fitted with ball or roller bearings, depending on their size.

The ball bearings are shielded and pre-lubricated by the manufacturer of the bearings themselves.

The roller bearings are instead pre-lubricated by OLI with specific grease, suitable to guarantee adequate lubrication for a number of hours that at least covers the service life of the bearing itself (specified for each model in the TAB section from page TAB.166 to TAB.173).

This is why no motovibrator requires periodic lubrication.

Vibrators with roller bearings can be recognised by the sticker placed on the exposed conductive part covers reading "DO NOT GREASE LIFETIME LUBRICATION".

Motovibrators with roller bearings are delivered with lubrication channels that can be accessed from the outside, but closed by threaded screws.

"For heavy duty applications is recommended to use the ""periodic relubrication"" method, this must be carried out every 3000 hours of operation by inserting special M6 lubricators into

the above channels instead of the screws."

The amount of grease required is specified in the TAB section from page TAB.166 to TAB.173

Only use this kind of grease:.....(Please refer to the label on the motorvibrator).

Do not mix different types of grease, even if they have similar characteristics.

At the end of the service life of the OLI bearing, it is advisable to replace both the bearing and the grease.

To remove the bearings, refer to the "REPLACING THE BEARINGS" paragraph.

Only use this kind of grease:.....(Please refer to the label on the motorvibrator).

Remove spent grease from the flanges. Install the new bearing and apply the new grease in the amounts specified in the TAB section from page TAB.166 to TAB.173.

Let the grease penetrate into rolling parts, paying great attention to ensure no impurities are introduced. The presence of residues or impurities can damage the bearing while reducing its service life.

REPLACING THE BEARINGS

THE REPLACEMENT MUST BE CARRIED OUT ON A BENCH BY QUALIFIED PERSONNEL ONLY AND WITH THE POWER OFF.

- Power off the motovibrator.
- Disassemble the motovibrator and place it on the bench.
- Remove the side covers.
- Remove the eccentric weights.
- Remove the bearing-holder flanges through the threaded extraction holes.
- Remove the bearing with the designated extractor.
- Take out the bush from the shaft.
- Replace the bearing.
- Reassemble the vibrator.

During the reassembly stage, maintain the parts perfectly at right angles, avoiding shifts that could irreparably damage the bearings and

bearing-holder flanges. Ensure the screws, washers and gaskets are not damaged.
If so, replace them.

PERIODICAL CHECKS

Before carrying out any maintenance work, ensure the electric motovibrator and the equipment to which it is connected are safe.

Before every work shift:

- Depending on the operating conditions, remove the layers of dust settled on it by only using a damp cloth, whilst making sure you do not spread the dust around. The layers of dust must never be more than 5 mm thick!
- Check for any abnormal noise due to friction or breakage of the electric motovibrator.

Monthly:

- Check the integrity of the rating plate and if it is damaged ask for a copy from the manufacturer.
- Check the integrity of the pictograms and if they are damaged replace them.
- Check the tightening of the clamping screws of the motovibrator.
- Check the integrity of the chain or safety cable.
- Have the continuity to the earthing circuit checked by qualified personnel.

CLEANING

Before performing any maintenance or cleaning on the machine, ensure the latter has been made safe.

When removing any dust there may be on the electric motovibrator, ensure you do not spread the dust in the surrounding environment.

The layers of dust must never be more than 5 mm thick!

Only clean with a damp cloth. The frequency of cleaning operations depends on the nature of the product processed by the appliance the electric motovibrator is inserted in. Do not direct high pressure jets of water on the electric motovibrator.

2.9 - RESIDUAL RISKS

Based on the use of the electric motovibrator, the user must inform the operators about the following residual risks by means of designated signs:

1.Mechanical hazards

For maintenance activities the operator must always use personal protective equipment. Designated warning signs near the machine indicate which personal protective equipment must be used

1.1 Risk of projected or falling objects

In the case of operation without covers to check the direction of rotation.

1.2 Uncontrolled movement hazard

When the machine is stopping

2.Presence of potentially hazardous dust

In the event of routine and unscheduled maintenance, the operator must wear suitable personal protective equipment and, namely, use masks to protect the airways of a suitable class based on the type of dust processed, as well as gloves or clothing. For further details, refer to the safety data sheet of the product processed by the equipment inside which the motovibrator is inserted.

3.Presence of harmful powders

Operators who access certain dust treatment processes involving the presence of harmful substances during routine and unscheduled operations must wear suitable protective equipment as specified in the safety data sheet of the product processed by the equipment inside which the motovibrator is inserted.

EN

4.Hot surfaces

The surface temperature of the motovibrator is greater than the burn threshold. The risk of burns exists. The internal surface of the motovibrator cannot be touched during normal operation and in case of maintenance. Wait for it to cool down to a temperature not exceeding 55°C (130°F)

2.10 - SCRAPPING THE MACHINE

Before going ahead with the scrapping of the electric motovibrator, thoroughly clean it and dispose of residual dust in accordance with the instructions on the safety data sheet.
The machine must be dismantled in a zone classified as safe.
The operators in charge of disposal must wear suitable personal protective equipment.
The electric motovibrator must be demolished so that it can no longer be reused as a complete unit and that one or several of its parts cannot be reused. In the event of disposal of the spent grease of the motovibrator, it is mandatory to comply with the legislation in place in the country where you operate. In the event of scrapping at the end of the machine's service life, ensure you disassemble the various plastic parts (gaskets) and send them to the designated collection centres. The remaining parts must be intended for the recovery of ferrous materials.
With reference to the WEEE directive, electrical and electronic components marked with the designated symbol must be disposed of in dedicated authorised collection centres.
The illegal disposal of "Waste Electrical and Electronic Equipment" (WEEE) is punishable with sanctions regulated by applicable laws in force.

2.11 - RETURNING THE MACHINE

In case of return of the machine, place it back into the packaging if retained or back into a box, trying to protect it as best as possible from any shocks due to transport. In any case, ensure the machine does not have any residues of material.

2.12 - DECLARATION OF CONFORMITY

The equipment comes with a declaration of conformity with current directives, though, if it is integrated into a more complex system, its safety is associated with compliance by the installer with all applicable directives. Any improper use of the electric motovibrator without following the instructions in this manual shall relieve OLI® from any liability related to malfunctions of the electric motovibrator. As this is an area undergoing strong technical and regulatory development, OLI® reserves the right to update, as quickly as possible, its product with all the technological knowledge and applicable official standards (EN, UNI) that might become available as and when.

PLEASE NOTE With reference to the "MACHINERY DIRECTIVE 2006/42/EC", the following declaration shall be intended as a "declaration of incorporation" under art. 4.2 paragraph 1 and Annex II.B.

OLI® SPA

Via Canalazzo, 35 – 41036 Medolla (MO) – ITALY

Declares that

the range of external electric motovibrators:

MVE _ _ _ _ _ | _ _ _ | _ | _ _ _ | _ _ _ _ _

- **-80A-** = Size of the motovibrator and bore (full list of models in the TAB section)
- **---** = Motovibrator series (Empty foot range motorvibrators)
- **J/E** = Certification
- **3** = 3000 max rpm – **36** = 3600 max rpm
  15 = 1500 max rpm – **18** = 1800 max rpm
  1 =1000 max rpm – **12** =1200 max rpm
  075 =7 50 max rpm – **090** =950 max rpm
  For the US market: **2** = 2 poles (3600 rpm), **4** = 4 poles (1800 rpm), **6** = 6 poles (1200 rpm), **8** = 8 poles (900 rpm)
- Max CF from 20 to 26400 kg. For the US market from 48 to 58300 Lb (three-phase motors)
  Max CF from 66 to 323 kg. For the US market from 71 to 712 Lb (single-phase motors)
- Internal code: Electric motovibrator

serial number:

YY | **X** | **.....**

- Progressive no. (1...999999).
- Commissioning line (A...Z)
- Year (2016, ...)

serial number: Refer to the last page of the manual

complies with the directives listed in the following declarations

EU DECLARATION OF CONFORMITY

with the requirements of the EU directives and subsequent amendments:

- ATEX directive 2014/34/EU of 26 February 2014

Compliance has been verified based on the requirements of the standard or regulatory documents below:

EN 60034-1, EN 60079-0:2018, EN 60079-31:2014

CE 2575 Ex

Ex II 2D Ex tb IIIC Tx Db IP66
Ex tb IIIC Tx Db IP66
ITS17ATEX102020X
IECEx ITS 17.0030X
-20°C≤Ta≤+40°C

DECLARATION OF INCORPORATION

In accordance with machinery directive 2006/42/EC, the above-mentioned range of external motovibrators are identified as 'PARTLY-COMPLETED MACHINERY'.

"B" Type:

- » **These products are built in accordance with directive 2006/42/EC and SUBSEQUENT AMENDMENTS.**
- » **These products must not be put into service until the final machine in which they are to be incorporated has been declared compliant with the provisions of this Directive as required.**
- » **The protection requirements of directive 2014/35/ EU have been met with reference to appendix I No 1.5.1 of machinery directive 2006/42/EC**

In accordance with annex IIB of machinery directive 2006/42/EC, the following essential safety and health requirements are applied and complied with:

1.1.1. - 1.1.2. - 1.1.3. - 1.1.5. - 1.3.1. - 1.3.2. - 1.3.3. - 1.3.4. - 1.3.7. - 1.3.8. - 1.3.9. - 1.4.1. - 1.5.1. - 1.5.2. - 1.5.4. - 1.5.5. - 1.5.6. - 1.5.7 - 1.5.8. - 1.6.1. - 1.6.4. - 1.7.1. - 1.7.2. - 1.7.3. - 1.7.4. - 1.7.4.1. - 1.7.4.2. - 1.7.4.3.

The relevant technical documentation has been filled out in accordance with annex VII B. OLI S.p.a. undertakes to send by mail or e-mail, in response to a reasoned request by the national authorities, relevant information on the products covered by this declaration, without prejudice to the intellectual property rights of the manufacturer. The information will be transmitted directly to the national authority that requested it. The technical documentation is held by OLI SpA, Via Canalazzo, 35 – 41036 Medolla (MO) Italy

Medolla 04/04/2017

Giorgio Gavioli
(the Legal Reppresentative)

EN

EN

OLI® SPA

Via Canalazzo, 35 – 41036 Medolla (MO) – ITALY

Declares that

the range of external electric motovibrators:

MVE _ _ _ _ _ | _ _ _ | _ | _ _ _ | _ _ _ _ _

- **-80A-** = Size of the motovibrator and bore (full list of models in the TAB section)
- **---** = Motovibrator series (Empty foot range motorvibrators)
- **H** = Certification
- **3** = 3000 max rpm – **36** = 3600 max rpm; **15** = 1500 max rpm – **18** = 1800 max rpm; **1** =1000 max rpm – **12** =1200 max rpm; **075** =7 50 max rpm – **090** =950 max rpm
  - For the US market: **2** = 2 poles (3600 rpm); **4** = 4 poles (1800 rpm); **6** = 6 poles (1200 rpm); **8** = 8 poles (900 rpm)
- Max CF from 20 to 26400 kg. For the US market from 48 to 58300 Lb (three-phase motors)
  Max CF from 66 to 323 kg. For the US market from 71 to 712 Lb (single-phase motors)
- Internal code: Electric motovibrator

serial number:

YY | **X** | **.....**

- Progressive no. (1...999999).
- Commissioning line (A...Z)
- Year (2016, ...)

serial number: Refer to the last page of the manual

complies with the directives listed in the following declarations

EU DECLARATION OF CONFORMITY

with the requirements of the EU directives and subsequent amendments:

- ATEX directive 2014/34/EU of 26 February 2014

Compliance has been verified based on the requirements of the standard or regulatory documents below:

EN 60034-1, EN 60079-0:2018, EN 60079-31:2014

CE 2575 Ex

Ex II 2D Ex tb IIIC T150°C Db IP66
Ex tb IIIC T150°C Db IP66
ITS17ATEX102020X
IECEx ITS 17.0030X
-20°C≤Ta≤+55°C

DECLARATION OF INCORPORATION

In accordance with machinery directive 2006/42/EC, the above-mentioned range of external motovibrators are identified as 'PARTLY-COMPLETED MACHINERY'.
"B" Type:

- » **These products are built in accordance with directive 2006/42/EC and SUBSEQUENT AMENDMENTS.**
- » **These products must not be put into service until the final machine in which they are to be incorporated has been declared compliant with the provisions of this Directive as required.**
- » **The protection requirements of directive 2014/35/ EU have been met with reference to appendix I No 1.5.1 of machinery directive 2006/42/EC**

In accordance with annex IIB of machinery directive 2006/42/EC, the following essential safety and health requirements are applied and complied with:

1.1.1. - 1.1.2. - 1.1.3. - 1.1.5. - 1.3.1. - 1.3.2. - 1.3.3. - 1.3.4. - 1.3.7. - 1.3.8. - 1.3.9. - 1.4.1. - 1.5.1. - 1.5.2. - 1.5.4. - 1.5.5. - 1.5.6. - 1.5.7 - 1.5.8. - 1.6.1. - 1.6.4. - 1.7.1. - 1.7.2. - 1.7.3. - 1.7.4. - 1.7.4.1. - 1.7.4.2. - 1.7.4.3.

The relevant technical documentation has been filled out in accordance with annex VII B. OLI S.p.a. undertakes to send by mail or e-mail, in response to a reasoned request by the national authorities, relevant information on the products covered by this declaration, without prejudice to the intellectual property rights of the manufacturer. The information will be transmitted directly to the national authority that requested it. The technical documentation is held by OLI SpA, Via Canalazzo, 35 – 41036 Medolla (MO) Italy

Medolla 04/04/2017

Giorgio Gavioli
(the Legal Reppresentative)

EN

OLI® SPA

Via Canalazzo, 35 – 41036 Medolla (MO) – ITALY

Declares that
the range of external electric motovibrators:

MVE _ _ _ _ _ | _ _ _ | _ | _ _ _ | _ _ _ _ _

- **-100A- / -105A- / -110A-** = Size of the motovibrator and bore (Full list of the models in the TAB section)
- **---** = Motovibrator series (Empty foot range motorvibrators)
- **J/E** = Certification
- **15** = 1500 max rpm – **18** = 1800 max rpm
  1 =1000 max rpm – **12** =1200 max rpm
  075 =7 50 max rpm – **090** =950 max rpm
  For the US market: **4** = 4 poles (1800 rpm), **6** = 6 poles (1200 rpm), **8** = 8 poles (900 rpm)
- Max CF from 11779 to 26489 kg. For the US market from 25968 to 58398 Lb (three-phase motors)
- Internal code: Electric motovibrator

serial number:

YY | **X** | .....

- Progressive no. (1...999999).
- Commissioning line (A...Z)
- Year (2016, ...)

serial number: Refer to the last page of the manual

complies with the directives listed in the following declarations

EU DECLARATION OF CONFORMITY

with the requirements of the EU directives and subsequent amendments:

- ATEX directive 2014/34/EU of 26 February 2014

Compliance has been verified based on the requirements of the standard or regulatory documents below:
EN 60034-1, EN 60079-0:2018, EN 60079-31:2014

CE 2575 Ex

Ex II 2D Ex tb IIIC Tx Db IP66
Ex tb IIIC Tx Db IP66
ITS17ATEX102020X
IECEx ITS 17.0030X
-20°C≤Ta≤+40°C

DECLARATION OF INCORPORATION

In accordance with machinery directive 2006/42/EC, the above-mentioned range of external motovibrators are identified as 'PARTLY-COMPLETED MACHINERY'.
"B" Type:

- » **These products are built in accordance with directive 2006/42/EC and SUBSEQUENT AMENDMENTS.**
- » **These products must not be put into service until the final machine in which they are to be incorporated has been declared compliant with the provisions of this Directive as required.**
- » **The protection requirements of directive 2014/35/ EU have been met with reference to appendix I No 1.5.1 of machinery directive 2006/42/EC**

In accordance with annex IIB of machinery directive 2006/42/EC, the following essential safety and health requirements are applied and complied with:

1.1.1. - 1.1.2. - 1.1.3. - 1.1.5. - 1.3.1. - 1.3.2. - 1.3.3. - 1.3.4. - 1.3.7. - 1.3.8. - 1.3.9. - 1.4.1. - 1.5.1. - 1.5.2. - 1.5.4. - 1.5.5. - 1.5.6. - 1.5.7 - 1.5.8. - 1.6.1. - 1.6.4. - 1.7.1. - 1.7.2. - 1.7.3. - 1.7.4. - 1.7.4.1. - 1.7.4.2. - 1.7.4.3.

The relevant technical documentation has been filled out in accordance with annex VII B. OLI S.p.a. undertakes to send by mail or e-mail, in response to a reasoned request by the national authorities, relevant information on the products covered by this declaration, without prejudice to the intellectual property rights of the manufacturer. The information will be transmitted directly to the national authority that requested it. The technical documentation is held by OLI SpA, Via Canalazzo, 35 – 41036 Medolla (MO) Italy

Medolla 04/04/2017

Giorgio Gavioli
(the Legal Reppresentative)

EN

OLI® SPA

Via Canalazzo, 35 – 41036 Medolla (MO) – ITALY

Declares that

the range of external electric motovibrators:

MVE _ _ _ _ _ | _ _ _ | _ | _ _ _ | _ _ _ _ _

- **-100A- / -105A- / -110A-** = Size of the motovibrator and bore (Full list of the models in the TAB section)
- **---** = Motovibrator series (Empty foot range motorvibrators)
- **H** = Certification
- **15** = 1500 max rpm – **18** = 1800 max rpm; **1** =1000 max rpm – **12** =1200 max rpm; **075** =7 50 max rpm – **090** =950 max rpm
  - For the US market: **4** = 4 poles (1800 rpm); **6** = 6 poles (1200 rpm); **8** = 8 poles (900 rpm)
- Max CF from 11779 to 26489 kg. For the US market from 25968 to 58398 Lb (three-phase motors)
- Internal code: Electric motovibrator

serial number:

YY | **X** | **.....**

- Progressive no. (1...999999).
- Commissioning line (A...Z)
- Year (2016, ...)

serial number: Refer to the last page of the manual

complies with the directives listed in the following declarations

EU DECLARATION OF CONFORMITY

with the requirements of the EU directives and subsequent amendments:

- ATEX directive 2014/34/EU of 26 February 2014

Compliance has been verified based on the requirements of the standard or regulatory documents below:

EN 60034-1, EN 60079-0:2018, EN 60079-31:2014

CE 2575 Ex

Ex II 2D Ex tb IIIC Tx Db IP66
Ex tb IIIC Tx Db IP66
ITS17ATEX102020X
IECEx ITS 17.0030X
-20°C≤Ta≤+55°C

DECLARATION OF INCORPORATION

In accordance with machinery directive 2006/42/EC, the above-mentioned range of external motovibrators are identified as 'PARTLY-COMPLETED MACHINERY'.
"B" Type:

- » **These products are built in accordance with directive 2006/42/EC and SUBSEQUENT AMENDMENTS.**
- » **These products must not be put into service until the final machine in which they are to be incorporated has been declared compliant with the provisions of this Directive as required.**
- » **The protection requirements of directive 2014/35/ EU have been met with reference to appendix I No 1.5.1 of machinery directive 2006/42/EC**

In accordance with annex IIB of machinery directive 2006/42/EC, the following essential safety and health requirements are applied and complied with:

1.1.1. - 1.1.2. - 1.1.3. - 1.1.5. - 1.3.1. - 1.3.2. - 1.3.3. - 1.3.4. - 1.3.7. - 1.3.8. - 1.3.9. - 1.4.1. - 1.5.1. - 1.5.2. - 1.5.4. - 1.5.5. - 1.5.6. - 1.5.7 - 1.5.8. - 1.6.1. - 1.6.4. - 1.7.1. - 1.7.2. - 1.7.3. - 1.7.4. - 1.7.4.1. - 1.7.4.2. - 1.7.4.3.

The relevant technical documentation has been filled out in accordance with annex VII B. OLI S.p.a. undertakes to send by mail or e-mail, in response to a reasoned request by the national authorities, relevant information on the products covered by this declaration, without prejudice to the intellectual property rights of the manufacturer. The information will be transmitted directly to the national authority that requested it. The technical documentation is held by OLI SpA, Via Canalazzo, 35 – 41036 Medolla (MO) Italy

Medolla 13/04/2020

Giorgio Gavioli
(the Legal Reppresentative)

OLI

SPARE PARTS

3

EN

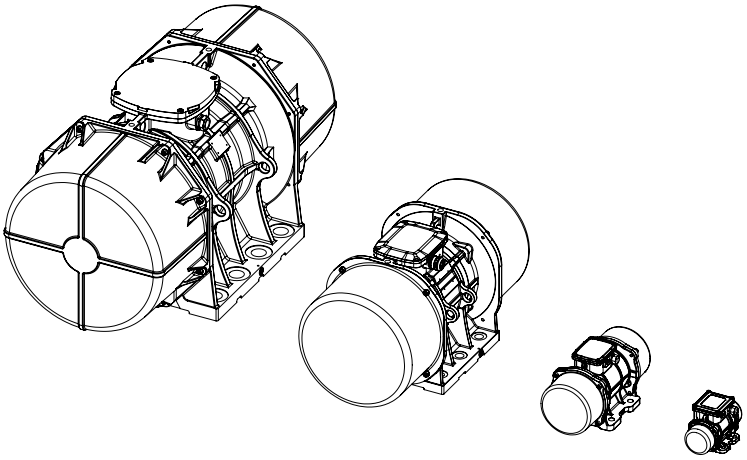

MVE

Serie J:

II2 D Ex tb IIIC Tx Db IP66

Ex tb IIIC Tx Db IP66
T.Amb -20/+40°C

Serie E:

II2 D Ex tb IIIC Tx Db IP66

Ex tb IIIC Tx Db IP66

Class II Div 2 Group F,G T4
Ex tb IIIC Tx Db IP66
T.Amb -20/+40°C

Serie H:

II2 D Ex tb IIIC Tx Db IP66

Ex tb IIIC Tx Db IP66
T.Amb -20/+55°C

Please specify the following for requests of spare parts:
- Type of motovibrator
- motovibrator series
- Power supply voltage
- Description of the spare part and drawing position number.*

* Contact OLI to check whether it is actually available.

Any work on the electric motovibrator must be carried out by specialised personnel and equipped with designated PPE. Ensure the machine has been made safe before conducting work on it.

REFERENCE TO DRAWINGS IN THE TAB. SECTION FROM PAGE TAB.131 TO PAGE TAB.134

EN

Pos.	DESCRIPTION
1	Motor casing
2	Bearing-holder flange
3	Weights cover
4	Shaft – rotor
5	Blade exposed conductive part
5a	Fixed exposed conductive part
5b	Mobile exposed conductive part
6	Bearing spacer
7	Exposed conductive part spacer
8	Bearing
9	Weights cover O-ring
10	Nut
11	Cover screw washer
12	Cover screw
13	Wound stator
14	Cable gland
15	Terminal board cover O-ring
16	Terminal board cover
17	Terminal board cover washer
18	Terminal board cover screw
19	Terminal board
20	Weights retainer Seeger ring

Pos.	DESCRIPTION
21	Weights adjustment disc
22	Exposed conductive part screw washer
23	Exposed conductive part screw
24	Feather key
25	Identification plate
26	Flange washer
27	Flange screw
28	Grease ring seal
29	Grease Seeger ring seal
30	Lubricator
31	Anti-rotation plate

SYMPTOM	POSSIBLE CAUSE	CORRECTIVE ACTION
The vibrator does not work	1) Missing or incorrect electrical connection	1) - Check the power mains - Ensure the voltage / frequency match the values reported on the rating plate. - Follow the connection diagrams - Always use loop-shaped cable ends. - Always use delayed overload protective devices to prevent tripping at start-up. - The overload protection must not exceed 10% of the max current value reported on the rating plate. - Always connect the earthing cable as specified in the manual. - The machine can be used with an inverter. The frequency setting is from 20Hz to the value on the rating plate.
	2) Incorrect wiring	2) - Check whether the cross-section of the cables is suitable according to the length of the cable. - Do not use extension cables. - Check the outside ø of the power supply cable to ensure the cable gland holds it perfectly. - Follow the connection diagrams
	3) Mechanical lock	3) - Check whether the shaft can move freely.
Temperature increase (overheating)	1) Oversized structure to vibrate	1) - Check the criterion according to which the motor vibrator was chosen and reduce the setting of the weights. - During the commissioning of the vibrating machines under no-load conditions, ensure the structure does not lead to resonance: this phenomenon can result in an increase in absorbed current and burn the motor.
	2) Incorrect power supply voltage	2) - Check the voltage against the data plate values.
	3) Operating temperature in the room	3) - Bring back the room temperature within the limits.
Increased noise levels	1) Loosening of the fastening screws	1) - Use screws and washers as specified on the use and maintenance manual. - Tighten the screws to the right tightening torque with a torque wrench as indicated in the manual.
	2) Noise level of the bearing	2) - Check whether the useful life of the bearing has been exceeded and, if so, replace it.

EN

DISEGNI E TABELLE
DRAWINGS AND CHART
ZEICHNUNGEN UND TABELLEN
DESSINS ET TABLEAUX

TAB

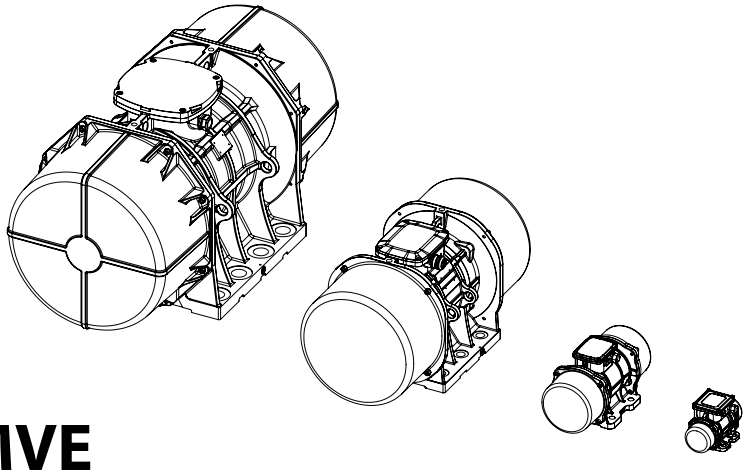

MVE

Serie J:

II2 D Ex tb IIIC Tx Db IP66

Ex tb IIIC Tx Db IP66
T.Amb -20/+40°C

Serie H:

II2 D Ex tb IIIC Tx Db IP66

Ex tb IIIC Tx Db IP66
T.Amb -20/+55°C

Serie E:

II2 D Ex tb IIIC Tx Db IP66

Ex tb IIIC Tx Db IP66

Class II Div 2 Group F,G T4
Ex tb IIIC Tx Db IP66
T.Amb -20/+40°C

MVE SIZE10

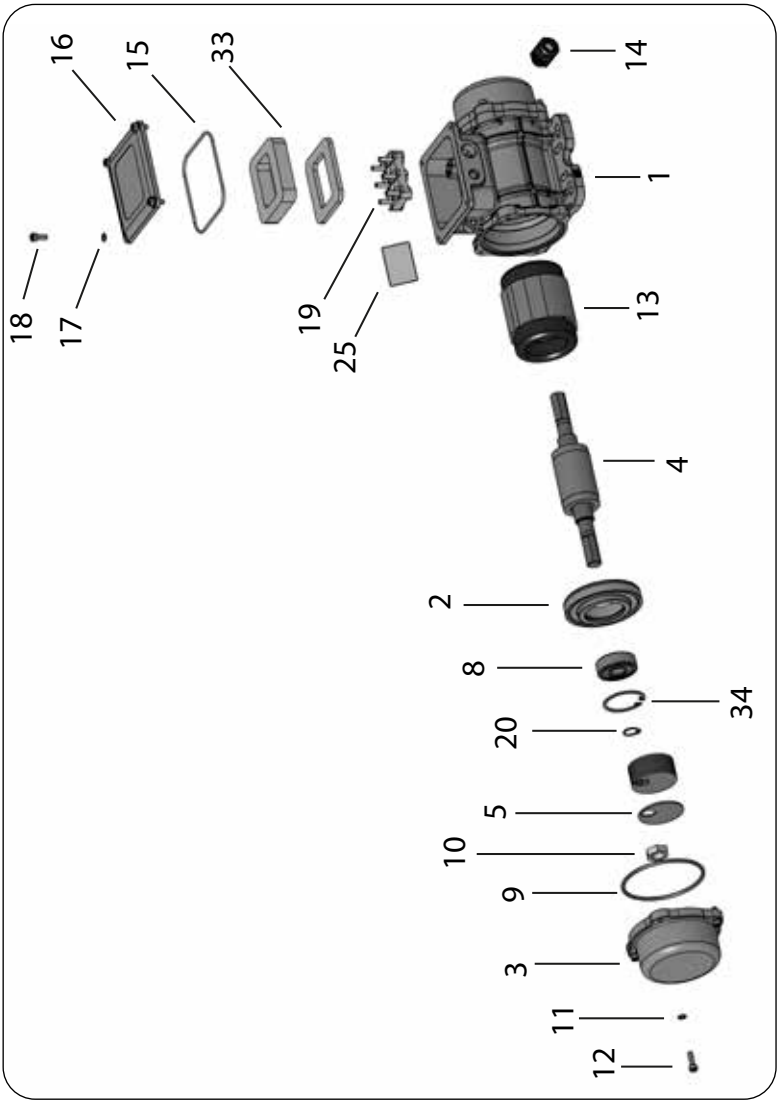

MVE SIZE 20 - 50

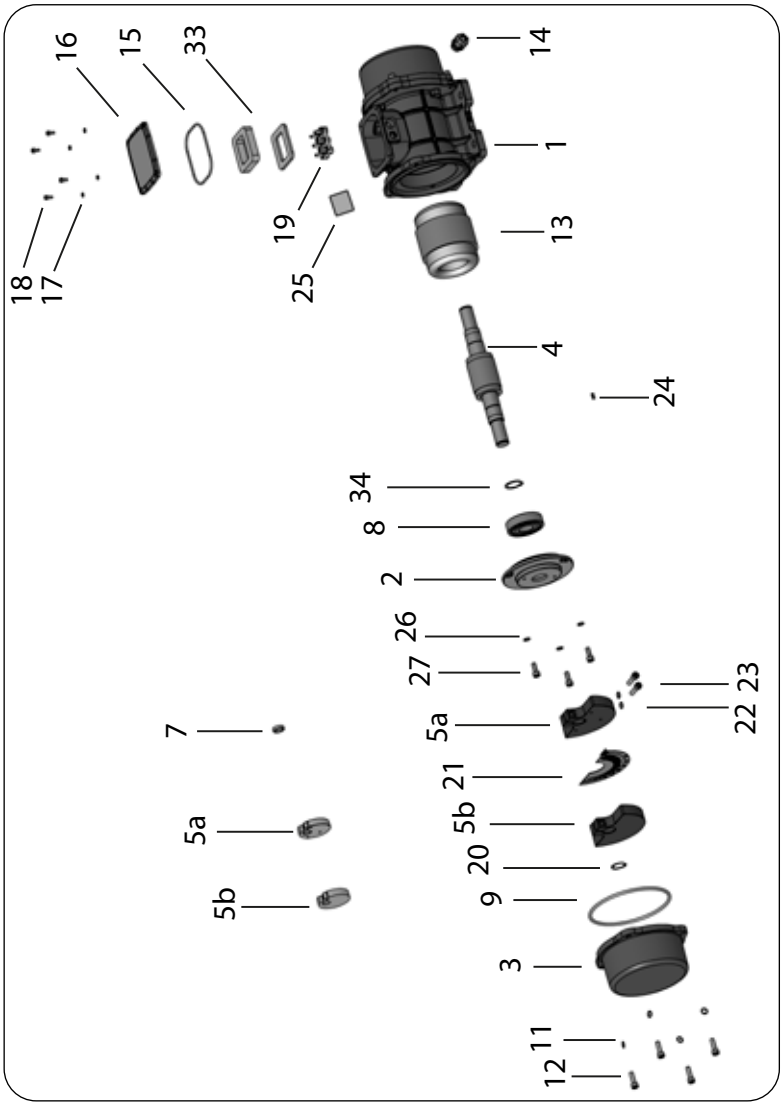

MVE SIZE 60 - 80

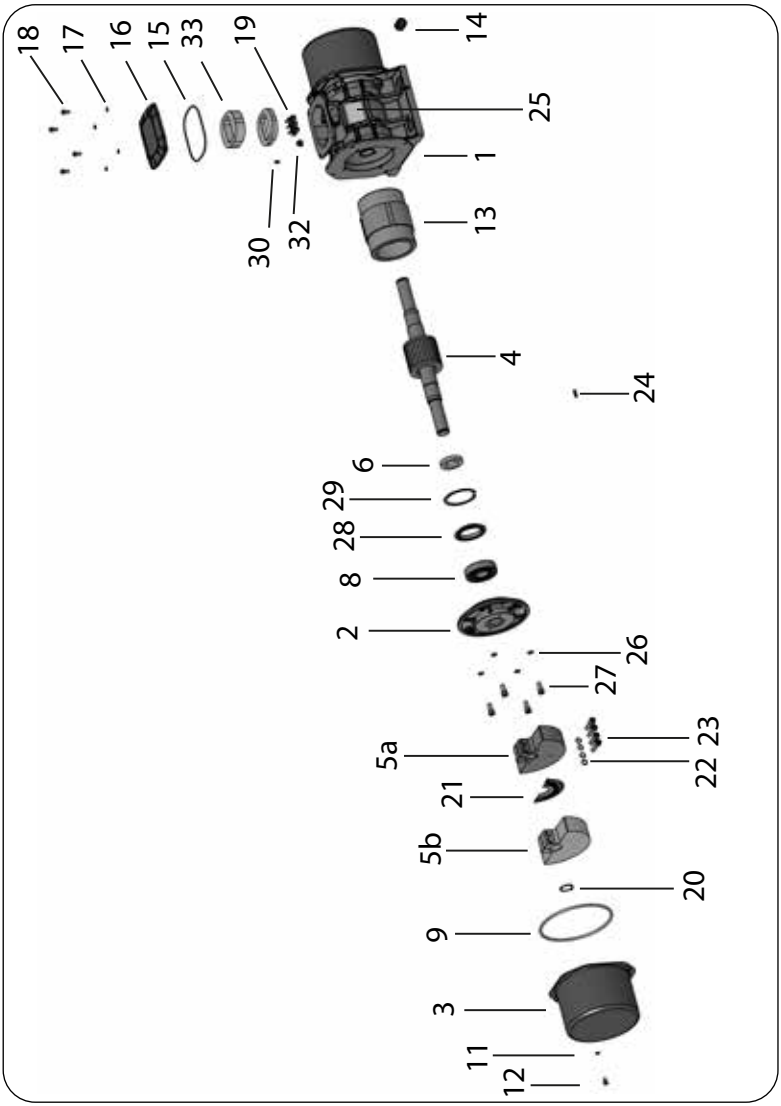

MVE SIZE 85 -91

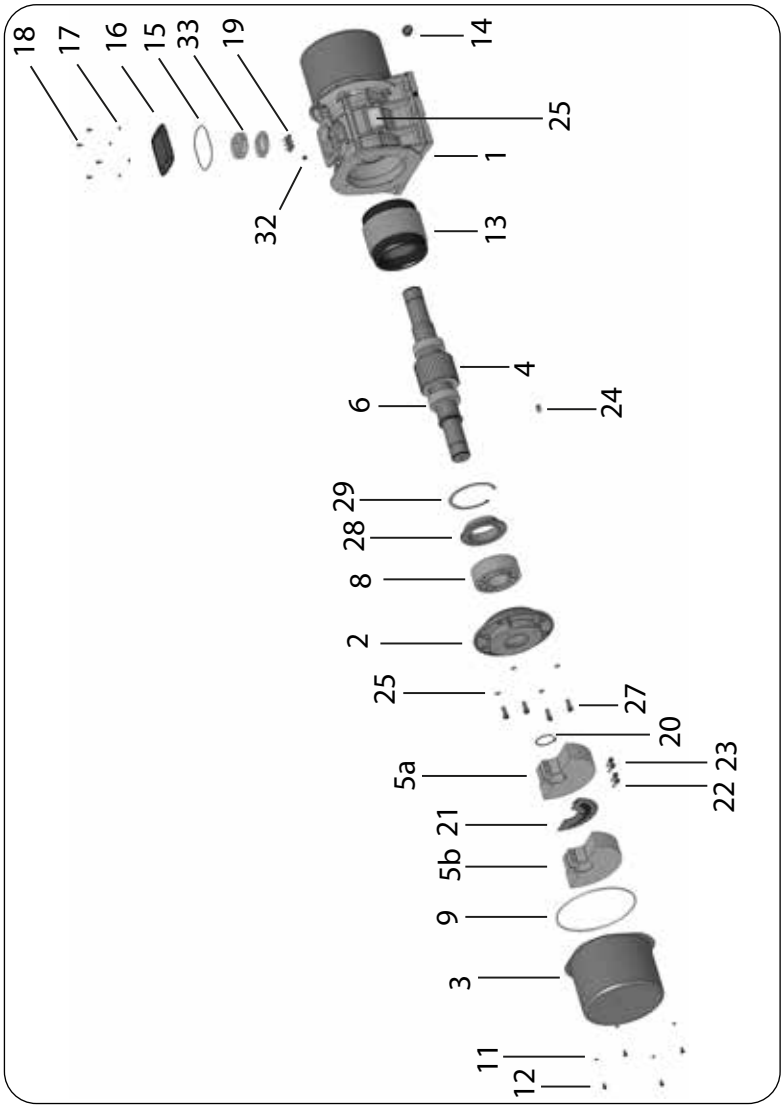

FIG. A1

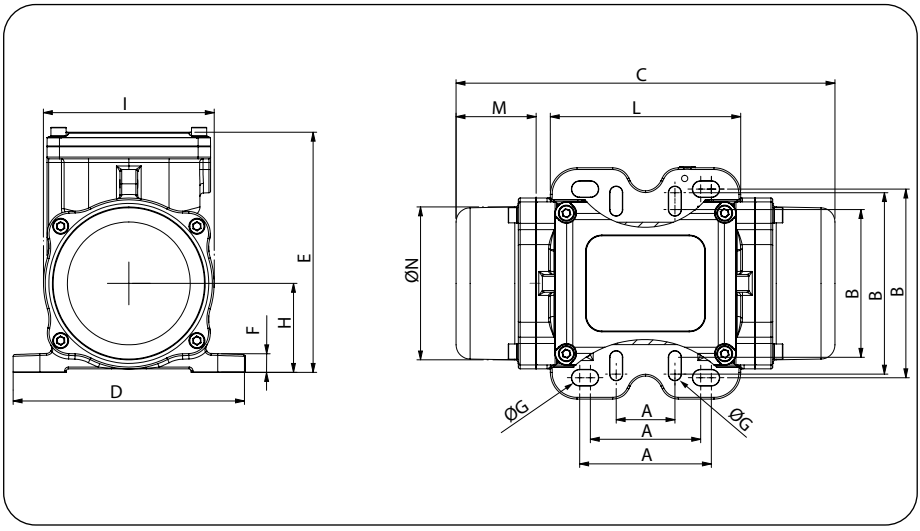

FIG. B1

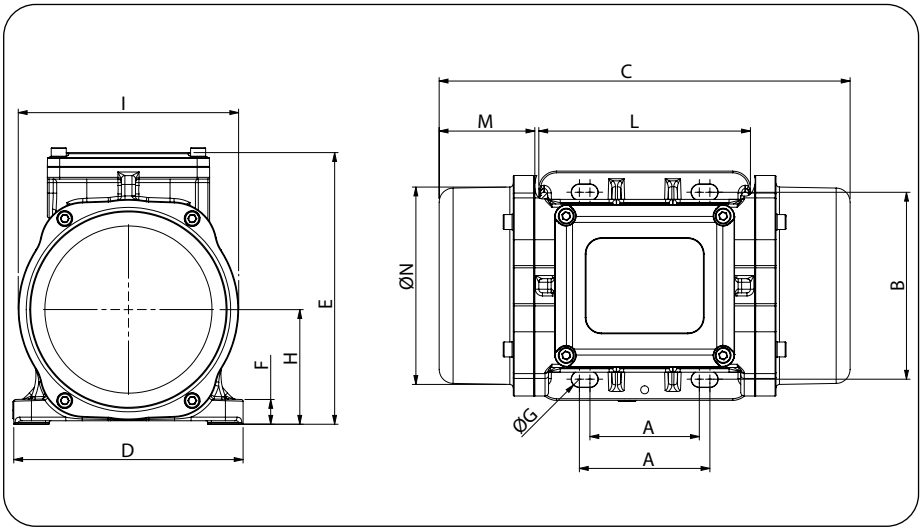

FIG. C1

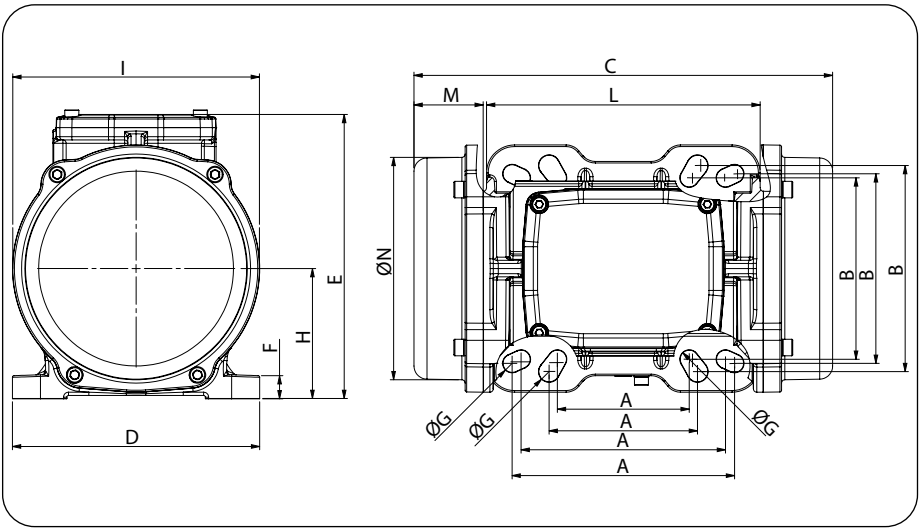

FIG. D1

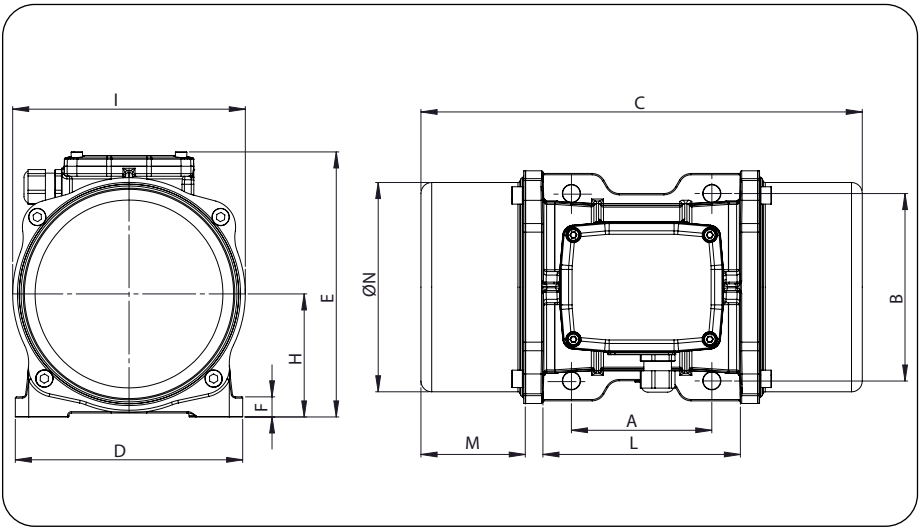

FIG. E1

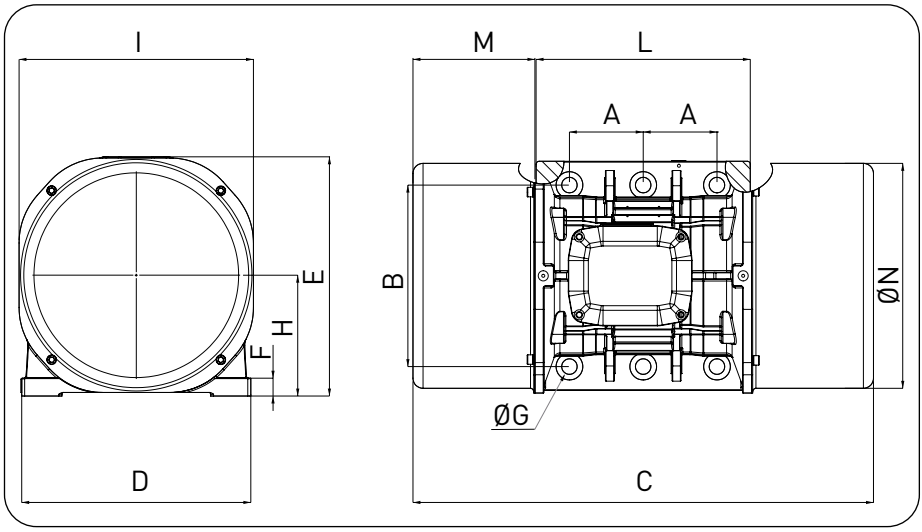

FIG. I

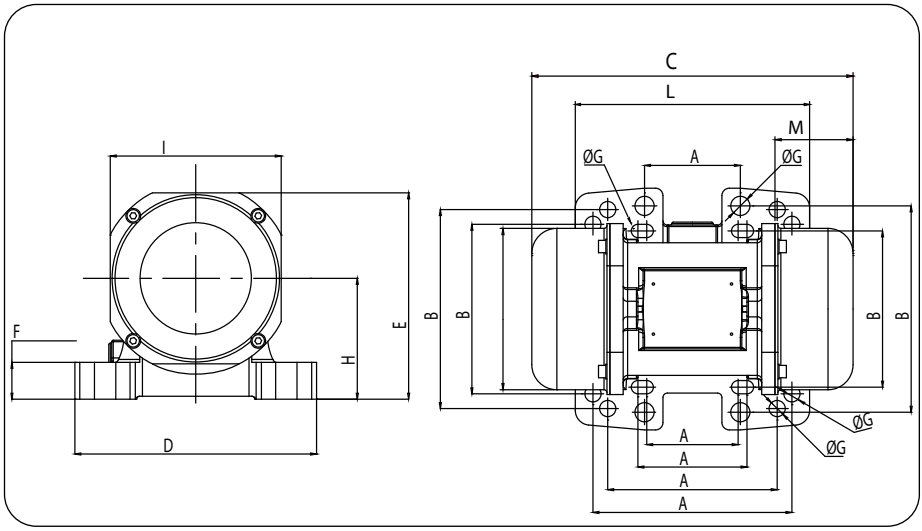

IDENTIFICAZIONE DEL MODELLO
Per una corretta identificazione dei dati tecnici relativi alla certificazione del vibratore fare riferimento allo schema sottostante e al modello indicato sulla targhetta del vibratore.

MODEL IDENTIFICATION
Please refer to the chart below for a correct identification of the motovibrator models and technical data.

MODELLIDENTIFIKATION
Bitte beachten Sie die untenstehende Tabelle für eine korrekte Identifizierung der Motovibrator-Modelle und technischen Daten.

MODÈLE D'IDENTIFICATION
Veuillez vous référer au tableau ci-dessous pour une correcte indentification des modèles des motovibrateurs et leurs données techniques

Certificazione / Certification / Zertifizierung / Certification		
J		II2 D Ex tb IIIC Tx Db IP66 Ex tb IIIC Tx Db IP66 T.Amb -20/+40°C
H		II2 D Ex tb IIIC Tx Db IP66 Ex tb IIIC Tx Db IP66 T.Amb -20/+55°C
E	Intertek	II2 D Ex tb IIIC Tx Db IP66 Ex tb IIIC Tx Db IP66 Class II Div 2 Group F,G T4 Ex tb IIIC Tx Db IP66 T.Amb -20/+40°C

13° Posizione nel codice commerciale 13th Position Commercial code 13. Position Artikelnummer 13ème Position, Code Commercial	J	H	E * V max: 600V
VOLTAGGIO VOLTAGE Stromspannung VOLTAGE	230/400V 50Hz		230/400V 50Hz
	230/460V 60Hz		230/460V 60Hz
	400/690V 50Hz		400V 50Hz (Δ)
	460V 60Hz (Δ)		460V 60Hz (Δ)
	290/500V 50Hz		290/500V 50Hz
	330/575V 60Hz		330/575V 60Hz
	500V 50Hz (Δ)		500V 50Hz (Δ)
	575V 60Hz (Δ)		575V 60Hz (Δ)
	230V 50Hz 1Ph		230V 50Hz 1Ph
	220V 60Hz 1Ph		220V 60Hz 1Ph
	115V 60Hz 1pH		115V 60Hz 1pH
	115V 50Hz 1Ph		115V 50Hz 1Ph

Codice commerciale - Commercial Code -Artikelnummer - Code Commercial																		
1	2	3		4	5	6	7	8	9	10	11	12	**13**		14	16	18	19
M	V	E			3	8	0	0	/	0	7	5	**H**	-	8	0	C	1

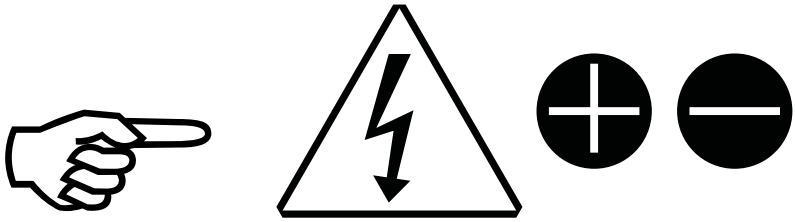

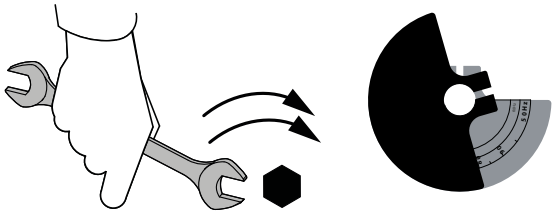

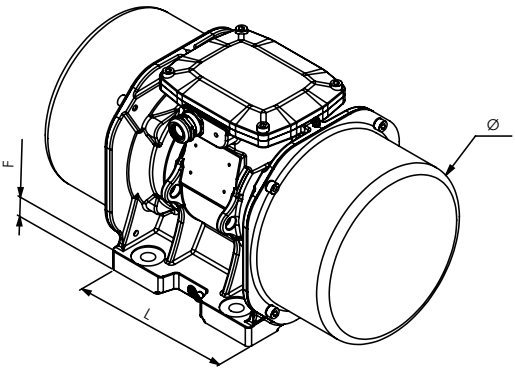
F
L
Ø

Type 50 Hz	Type 60 Hz	For U.S. Market	Electric Features																						
			power				Current (A max)								Ia/In		-20°C to 40°C		Cable Type				Cable gland		
			Kw		Hp		Winding 230/400				Winding 290/500						Class II Div.2	II 2D	IEC type	U.S. Market Type: AWG (SOW)	Class temp. °C	IEC type	Clamp. cable Ø	Class temp. °C
			50 hz	60 hz	50 hz	60 hz	230V (Δ)	400V (Y)	230V (Δ)	460V (Y)	290V (Δ)	500V (Y)	330V (Δ)	575V (Y)	50Hz	60Hz	Temp. Class	Temp. Class					mm	
							50Hz		60Hz		50Hz		60Hz				T	(°C)						
MVE 60/3E-10A0	MVE 60/36E-10A0	MVE 160/2E-10A0	0.09	0.09	0.12	0.12	0.43	0.25	0.46	0.23	0.35	0.20	0.32	0.18	3.2	3.2	T4	100	4G1.5	18-4c	80	M16	5-10	80
MVE 100/3E-10A0	MVE 100/36E-10A0	MVE 220/2E-10A0	0.09	0.09	0.12	0.12	0.43	0.25	0.46	0.23	0.35	0.20	0.32	0.18	3.2	3.2	T4	100	4G1.5	18-4c	80	M16	5-10	80
MVE 200/3E-20A0	MVE 200/36E-20A0	MVE 440/2E-20A0	0.15	0.18	0.20	0.24	0.61	0.35	0.60	0.30	0.48	0.28	0.42	0.24	3.5	3.5	T4	100	4G2.5	16-4c	80	M20	7-13	80
MVE 200/3E-20AX	MVE 200/36E-20AX	MVE 440/2E-20AX															T4	100	4G2.5	16-4c	80	M20	7-13	80
MVE 200/3E-23A0	MVE 200/36E-23A0	MVE 440/2E-23A0	0.15	0.18	0.20	0.24	0.61	0.35	0.60	0.30	0.48	0.28	0.42	0.24	3.5	3.5	T4	100	4G2.5	16-4c	80	M20	7-13 7-13 7-13 7-13	80
MVE 300/3E-30A0	MVE 300/36E-30A0	MVE 690/2E-30A0	0.25	0.28	0.34	0.38	0.90	0.52	0.90	0.45	0.72	0.42	0.62	0.36	3.8	3.7	T4	100	4G2.5	16-4c	80	M20	7-13	80
MVE 300/3E-30AX	MVE 300/36E-30AX	MVE 690/2E-30AX															T4	100	4G2.5	16-4c	80	M20	7-13	80
MVE 400/3E-30A0	MVE 400/36E-30A0	MVE 890/2E-30A0	0.27	0.33	0.36	0.44	1.00	0.58	1.20	0.60	0.80	0.46	0.83	0.48	3.7	3.7	T4	100	4G2.5	16-4c	80	M20	7-13	80
MVE 400/3E-30AX	MVE 400/36E-30AX	MVE 890/2E-30AX															T4	100	4G2.5	16-4c	80	M20	7-13	80
MVE 500/3E-40A0	MVE 500/36E-40A0	MVE 1200/2E-40A0	0.50	0.58	0.67	0.78	1.66	0.96	1.94	0.97	1.33	0.77	1.34	0.78	4.2	4.4	T4	135	4G2.5	16-4c	120	M20	7-13	120
MVE 500/3E-40AX	MVE 500/36E-40AX	MVE 1200/2E-40AX															T4	135	4G2.5	16-4c	120	M20	7-13	120
MVE 700/3E-40A0	MVE 700/36E-40A0	MVE 1700/2E-40A0	0.59	0.61	0.79	0.82	2.16	1.25	2.48	1.24	1.73	1.00	1.72	0.99	4.5	5.2	T4	135	4G2.5	16-4c	120	M20	7-13	120
MVE 700/3E-40AX	MVE 700/36E-40AX	MVE 1700/2E-40AX															T4	135	4G2.5	16-4c	120	M20	7-13	120
MVE 800/3E-50A0	MVE 800/36E-50A0	MVE 1800/2E-50A0	0.70	0.84	0.94	1.13	2.51	1.45	3.00	1.50	2.01	1.16	2.08	1.20	4.0	4.0	T4	135	4G2.5	16-4c	120	M20	7-13	120
MVE 800/3E-50C0	MVE 800/36E-50C0	MVE 1800/2E-50C0															T4	135	4G2.5	16-4c	120	M20	7-13	120
MVE 1200/3E-50A0	MVE 1200/36E-50A0	MVE 2300/2E-50A0	0.95	1.15	1.27	1.54	3.20	1.85	3.90	1.95	2.56	1.48	2.70	1.56	4.6	4.7	T4	135	4G2.5	16-4c	120	M20	7-13	120
MVE 1200/3E-50C0	MVE 1200/36E-50C0	MVE 2300/2E-50C0															T4	135	4G2.5	16-4c	120	M20	7-13	120
MVE 1300/3E-50A0	MVE 1300/36E-50A0	MVE 3100/2E-50A0	1.30	1.38	1.74	1.85	4.22	2.44	4.50	2.25	3.38	1.95	3.11	1.80	5.4	5.2	T4	135	4G2.5	16-4c	120	M20	7-13	120
MVE 1300/3E-51A0	MVE 1300/36E-51A0	MVE 3100/2E-51A0															T4	135	4G2.5	16-4c	120	M20	7-13	120
MVE 1300/3E-50C0	MVE 1300/36E-50C0	MVE 3100/2E-50C0															T4	135	4G2.5	16-4c	120	M20	7-13	120
MVE 1150/3E-60C0	MVE 1150/36E-60C0	MVE 2500/2E-60C0	1.54	1.60	2.07	2.15	5.09	2.94	5.22	2.61	4.07	2.35	3.61	2.09	6.1	6.4	T4	135	4G4	14-4c	120	M25	10-16	120
MVE 1600/3E-60A0	MVE 1600/36E-60A0	MVE 3500/2E-60A0	1.54	1.60	2.07	2.15	5.09	2.94	5.22	2.61	4.07	2.35	3.61	2.09	6.1	6.4	T4	135	4G4	14-4c	120	M25	10-16	120
MVE 1600/3E-60C0	MVE 1600/36E-60C0	MVE 3500/2E-60C0															T4	135	4G4	14-4c	120	M25	10-16	120
MVE 2000/3E-60A0	MVE 2000/36E-60A0	MVE 4100/2E-60A0	2.00	2.10	2.68	2.82	6.49	3.75	6.84	3.42	5.19	3.00	4.73	2.74	6.7	6.6	T4	135	4G4	14-4c	120	M25	10-16	120
MVE 2000/3E-60C0	MVE 2000/36E-60C0	MVE 4100/2E-60C0															T4	135	4G4	14-4c	120	M25	10-16	120
MVE 2300/3E-60A0	MVE 2300/36E-60A0	MVE 5100/2E-60A0	2.40	2.45	3.22	3.29	7.68	4.44	6.90	3.45	6.14	3.55	4.77	2.76	6.2	6.5	T4	135	4G4	14-4c	120	M25	10-16	120
MVE 2300/3E-60C0	MVE 2300/36E-60C0	MVE 5100/2E-60C0															T4	135	4G4	14-4c	120	M25	10-16	120
MVE 3200/3E-75A1	MVE 3200/36E-75A1	MVE 7600/2E-75A1	2.76	2.90	3.70	3.89	9.17	5.30	9.22	4.61	7.34	4.24	6.38	3.69	8.5	8.4	T4	135	4G6	12-4c	120	M32	13-20	120
MVE 3200/3E-75C0	MVE 3200/36E-75C0	MVE 7600/2E-75C0															T4	135	4G6	12-4c	120	M32	13-20	120
MVE 3200/3E-75C1	MVE 3200/36E-75C1	MVE 7600/2E-75C1															T4	135	4G6	12-4c	120	M32	13-20	120
MVE 4000/3E-75A1	MVE 4000/36E-75A1	MVE 8800/2E-75A1	2.90	2.90	3.89	3.89	9.17	5.30	9.22	4.61	7.34	4.24	6.38	3.69	8.7	9.9	T4	135	4G6	12-4c	120	M32	13-20	120
MVE 4000/3E-75C0	MVE 4000/36E-75C0	MVE 8800/2E-75C0															T4	135	4G6	12-4c	120	M32	13-20	120
MVE 4000/3E-75C1	MVE 4000/36E-75C1	MVE 8800/2E-75C1															T4	135	4G6	12-4c	120	M32	13-20	120

(*) Certification level.
(**) Working moment = 2 x static moment.
(***) Custom footprint (available on request.

Dimension with coarse degree of accurancy related to UNI 22768/1
Rights reserved to modify technical specifications.

Type 50 Hz	Type 60 Hz	For U.S. Market	Electric Features																							
			power				Current (A max)										Ia/In		-20°C to 40°C		Cable Type			Cable gland		
			Kw		Hp		Winding 230/400					Winding 290/500							ClassII Div.2	II 2D						
			50 hz	60 hz	50 hz	60 hz	230V (Δ)	400V (Y)	230V (Δ)	460V (Y)		290V (Δ)	500V (Y)	330V (Δ)	575V (Y)		50Hz	60Hz	Temp. Class	Temp. Class	IEC type	U.S. Market Type: AWG (SOW)	Class temp. °C	IEC type	Clamp. cable Ø	Class temp. °C
							50Hz		60Hz			50Hz		60Hz					T	(°C)					mm	
MVE 5000/3E-75A1	MVE 5000/36E-75A1	MVE 11500/2E-75A1	4.00	4.00	5.36	5.36	12.49	7.22	12.56	6.28		9.99	5.78	8.69	5.02		8.7	10.0	T4	135	4G6	12-4c	120	M32	13-20	120
MVE 5000/3E-75C0	MVE 5000/36E-75C0	MVE 11500/2E-75C0																	T4	135	4G6	12-4c	120	M32	13-20	120
MVE 5000/3E-75C1	MVE 5000/36E-75C1	MVE 11500/2E-75C1																	T4	135	4G6	12-4c	120	M32	13-20	120
							Winding 400 (Δ)				Winding 500 (Δ)															
							400V (Δ)	/	460V (Δ)	/	500V (Δ)	575V (Δ)														
							50Hz		60Hz		50Hz	60Hz														
MVE 6500/3E-85A0	MVE 6500/36E-85A0	MVE 14400/2E-85A0	5.23	5.50	7.01	7.38	9.43	/	8.20	/	7.54	6.56					8.7	9.0	T4	135	4G6	12-4c	120	M32	13-20	120
MVE 6500/3E-85B0	MVE 6500/36E-85B0	MVE 14400/2E-85B0																	T4	135	4G6	12-4c	120	M32	13-20	120
MVE 6500/3E-85C1	MVE 6500/36E-85C1	MVE 14400/2E-85C1																	T4	135	4G6	12-4c	120	M32	13-20	120
MVE 9000/3E-85A0	MVE 9000/36E-85A0	MVE 20100/2E-85A0	9.50	9.30	12.74	12.47	17.80	/	14.40	/	14.24	11.52					8.6	8.8	T4	135	4G6	12-4c	120	M32	13-20	120
MVE 9000/3E-85B0	MVE 9000/36E-85B0	MVE 20100/2E-85B0																	T4	135	4G6	12-4c	120	M32	13-20	120
MVE 9000/3E-85C1	MVE 9000/36E-85C1	MVE 20100/2E-85C1																	T4	135	4G6	12-4c	120	M32	13-20	120
MVE 6500/3E-86A0	MVE 6500/36E-86A0	MVE 14400/2E-86A0	5.50	6.30	7.38	8.45	9.50	/	9.50	/	7.60	7.60					8.2	7.7	T4	135	4G6	12-4c	120	M32	13-20	120
MVE 6500/3E-86B0	MVE 6500/36E-86B0	MVE 14400/2E-86B0																	T4	135	4G6	12-4c	120	M32	13-20	120
MVE 9000/3E-86A0	MVE 9000/36E-86A0	MVE 20100/2E-86A0	6.60	7.70	8.85	10.33	11.50	/	11.50	/	9.20	9.20					8.2	8.2	T4	135	4G6	12-4c	120	M32	13-20	120
MVE 9000/3E-86B0	MVE 9000/36E-86B0	MVE 20100/2E-86B0																	T4	135	4G6	12-4c	120	M32	13-20	120

(*) Certification level.
(**) Working moment = 2 x static moment.
(***) Working moment = 2 x static moment.

Dimension with coarse degree of accurancy related to UNI 22768/1
Rights reserved to modify technical specifications.

Type 50 Hz	Type 60 Hz	For U.S. Market	Electric Features																	
			power				Current			Capacitor			-20°C to 40°C		Cable Type			Cable gland		
			Kw		Hp		A max			µF			ClassII Div.2	II 2D	IEC type	U.S. Market Type: AWG (SOW)	Class temp. °C	IEC type	Clamp.cable Ø	Class temp.
			50 hz	60 hz	50 hz	60 hz	230V 50Hz	220V 60Hz	115V 50/60Hz	230V 50Hz	220V 60Hz	115V 50/60Hz	Temp. Class T	Temp. Class (°C)					mm	°C
MVE 60/3E-10A0	MVE 60/36E-10A0	MVE 160/2E-10A0	0.08	0.09	0.11	0.12	0.43	0.43	1.03	3	3	6.3	T4	100	4G1.5	18-4c	80	M16	5-10	80
MVE 100/3E-10A0	MVE 100/36E-10A0	MVE 220/2E-10A0	0.1	0.11	0.13	0.15	0.54	0.54	1.3	4	4	8	T4	100	4G1.5	18-4c	80	M16	5-10	80
MVE 200/3E-20A0	MVE 200/36E-20A0	MVE 440/2E-20A0	0.18	0.21	0.24	0.28	1.14	1.14	2.62	8	8	16	T4	100	4G2.5	16-4c	80	M20	7-13	80
MVE 200/3E-20AX	MVE 200/36E-20AX	MVE 440/2E-20AX											T4	100	4G2.5	16-4c	80	M20	7-13	80
MVE 200/3E-23A0	MVE 200/36E-23A0	MVE 440/2E-23A0	0.18	0.21	0.24	0.28	1.14	1.14	2.62	8	8	16	T4	100	4G2.5	16-4c	80	M20	7-13	80
													T4	100	4G2.5	16-4c	80	M20	7-13	80
													T4	100	4G2.5	16-4c	80	M20	7-13	80
													T4	100	4G2.5	16-4c	80	M20	7-13	80
MVE 300/3E-30A0	MVE 300/36E-30A0	MVE 690/2E-30A0	0.27	0.28	0.36	0.38	1.58	1.58	3.43	12.5	12.5	25.0	T4	100	4G2.5	16-4c	80	M20	7-13	80
													T4	100	4G2.5	16-4c	80	M20	7-13	80
													T4	100	4G2.5	16-4c	80	M20	7-13	80
													T4	100	4G2.5	16-4c	80	M20	7-13	80
MVE 300/3E-30AX	MVE 300/36E-30AX	MVE 690/2E-30AX											T4	100	4G2.5	16-4c	80	M20	7-13	80

(*) Certification level.
(**) Working moment = 2 x static moment.
(***) Custom footprint (available on request.

Dimension with coarse degree of accurancy related to UNI 22768/1
Rights reserved to modify technical specifications.

Type 50 Hz	Type 60 Hz	For U.S. Market	power				Current (A max)				Electric Features										Cable gland	
			Kw		Hp		Winding 230/400				Winding 290/500			Ia/In			-20°C to 40°C		Cable Type			
			50 hz	60 hz	50 hz	60 hz	230V (Δ)	400V (Y)	230V (Δ)	460V (Y)	290V (Δ)	500V (Y)	330V (Δ)	575V (Y)	50Hz	60Hz	Classli Div.2 Temp. Class T	II 2D Temp. Class (°C)	IEC type	U.S. Market Type: AWG (SOW)	Class temp. °C	IEC type	Clamp. cable Ø
							50Hz		60Hz		50Hz		60Hz										mm
MVE 40/135-10A0	MVE 40/18E-10A0	MVE 70/4E-10A0	0.03	0.04	0.04	0.05	0.54	0.31	0.62	0.31	0.43	0.25	0.43	0.25	2.2	2.2	T4	100.00	4G1.5	18-4c	80	M16	5-10
MVE 90/15E-20A0	MVE 90/18E-20A0	MVE 200/4E-20A0	0.07	0.08	0.09	0.11	0.54	0.31	0.50	0.25	0.43	0.25	0.35	0.20	2.2	2.2	T4	100	4G2.5	16-4c	80	M20	7-13
MVE 90/15E-20AX	MVE 90/18E-20AX	MVE 200/4E-20AX															T4	100	4G2.5	16-4c	80	M20	7-13
MVE 90/15E-23A0	MVE 90/18E-23A0	MVE 200/4E-23A0	0.07	0.84	0.09	1.13	0.54	0.31	0.50	0.25	0.43	0.25	0.35	0.20	2.2	2.2	T4	100	4G2.5	16-4c	80	M20	7-13
																	T4	100	4G2.5	16-4c	80	M20	7-13
																	T4	100	4G2.5	16-4c	80	M20	7-13
MVE 200/15E-30A0	MVE 200/18E-30A0	MVE 400/4E-30A0	0.12	0.15	0.16	0.19	0.85	0.49	1.00	0.50	0.68	0.39	0.69	0.40	2.2	2.2	T4	100	4G2.5	16-4c	80	M20	7-13
																	T4	100	4G2.5	16-4c	80	M20	7-13
MVE 200/15E-30AX	MVE 200/18E-30AX	MVE 400/4E-30AX															T4	135	4G2.5	16-4c	120	M20	7-13
MVE 400/15E-40A0	MVE 400/18E-40A0	MVE 860/4E-40A0	0.27	0.32	0.36	0.43	1.45	0.84	1.72	0.86	1.16	0.67	1.19	0.69	2.7	0.2	T4	135	4G2.5	16-4c	120	M20	7-13
MVE 400/15E-40AX	MVE 400/18E-40AX	MVE 860/4E-40AX															T4	135	4G2.5	16-4c	120	M20	7-13
MVE 500/15E-40A0	MVE 500/18E-40A0	MVE 1150/4E-40A0	0.35	0.40	0.47	0.54	1.83	1.06	2.18	1.09	1.47	0.85	1.51	0.87	2.9	3.0	T4	135	4G2.5	16-4c	120	M20	7-13
MVE 500/15E-40AX	MVE 500/18E-40AX	MVE 1150/4E-40AX															T4	135	4G2.5	16-4c	120	M20	7-13
MVE 300/15E-50A0	MVE 300/18E-50A0	MVE 750/4E-50A0	0.62	0.73	0.83	0.98	2.28	1.32	2.40	1.20	1.83	1.06	1.66	0.96	3.4	3.2	T4	135	4G2.5	16-4c	120	M20	7-13
MVE 300/15E-50C0	MVE 300/18E-50C0	MVE 750/4E-50C0															T4	135	4G2.5	16-4c	120	M20	7-13
MVE 300/15E-51A0	MVE 300/18E-51A0	MVE 750/4E-51A0															T4	135	4G2.5	16-4c	120	M20	7-13
MVE 700/15E-50A0	MVE 700/18E-50A0	MVE 1530/4E-50A0	0.62	0.73	0.83	0.98	2.28	1.32	2.40	1.20	1.83	1.06	1.66	0.96	3.4	3.2	T4	135	4G2.5	16-4c	120	M20	7-13
MVE 700/15E-50C0	MVE 700/18E-50C0	MVE 1530/4E-50C0															T4	135	4G2.5	16-4c	120	M20	7-13
MVE 710/15E-50A0	MVE 710/18E-50A0	MVE 1540/4E-50A0	0.62	0.73	0.83	0.98	2.28	1.32	2.40	1.20	1.83	1.06	1.66	0.96	3.4	3.2	T4	135	4G2.5	16-4c	120	M20	7-13
MVE 710/15E-50C0	MVE 710/18E-50C0	MVE 1540/4E-50C0															T4	135	4G2.5	16-4c	120	M20	7-13
MVE 950/15E-50A0	MVE 950/18E-50A0	MVE 2100/4E-50A0	0.64	0.77	0.86	1.03	2.42	1.40	2.70	1.35	1.94	1.12	1.87	1.08	4.2	4.2	T4	135	4G2.5	16-4c	120	M20	7-13
MVE 950/15E-50C0	MVE 950/18E-50C0	MVE 2100/4E-50C0															T4	135	4G2.5	16-4c	120	M20	7-13
MVE 1100/15E-50A0	MVE 1100/18E-50A0	MVE 2300/4E-50A0	0.64	0.77	0.86	1.03	2.42	1.40	2.70	1.35	1.94	1.12	1.87	1.08	4.0	4.0	T4	135	4G2.5	16-4c	120	M20	7-13
MVE 1100/15E-50C0	MVE 1100/18E-50C0	MVE 2300/4E-50C0															T4	135	4G2.5	16-4c	120	M20	7-13
MVE 1100/15E-51A0	MVE 1100/18E-51A0	MVE 2300/4E-51A0															T4	135	4G2.5	16-4c	120	M20	7-13
MVE 1400/15E-60A0	MVE 1400/18E-60A0	MVE 3100/4E-60A0	0.70	0.84	0.94	1.13	3.08	1.78	3.56	1.78	2.46	1.42	2.46	1.42	4.2	4.2	T4	135	4G4	14-4c	120	M25	10-16
MVE 1400/15E-60C0	MVE 1400/18E-60C0	MVE 3100/4E-60C0															T4	135	4G4	14-4c	120	M25	10-16
MVE 1700/15E-60A0	MVE 1700/18E-60A0	MVE 3880/4E-60A0	1.13	1.30	1.52	1.74	3.74	2.16	4.18	2.09	2.99	1.73	2.89	1.67	4.9	4.7	T4	135	4G4	14-4c	120	M25	10-16
MVE 1700/15E-60C0	MVE 1700/18E-60C0	MVE 3880/4E-60C0															T4	135	4G4	14-4c	120	M25	10-16
MVE 2400/15E-60A0	MVE 2400/18E-60A0	MVE 5940/4E-60A0	1.57	1.88	2.11	2.53	5.54	3.20	6.40	3.20	4.43	2.56	4.43	2.56	5.1	5.1	T4	135	4G4	14-4c	120	M25	10-16
MVE 2400/15E-60C0	MVE 2400/18E-60C0	MVE 5340/4E-60C0															T4	135	4G4	14-4c	120	M25	10-16
MVE 2500/15E-70A0	MVE 2500/18E-70A0	MVE 5700/4E-70A0	1.76	2.00	2.36	2.68	5.33	3.08	6.00	3.00	4.26	2.46	4.15	2.40	6.3	6.2	T4	135	4G4	14-4c	120	M25	10-16
MVE 2500/15E-70B0	MVE 2500/18E-70B0	MVE 5700/4E-70B0															T4	135	4G4	14-4c	120	M25	10-16
MVE 2500/15E-70C0	MVE 2500/18E-70C0	MVE 5700/4E-70C0															T4	135	4G4	14-4c	120	M25	10-16
MVE 3000/15E-70A0	MVE 3000/18E-70A0	MVE 6840/4E-70A0	1.90	2.30	2.55	3.08	6.37	3.68	6.60	3.30	5.09	2.94	4.57	2.64	6.8	6.7	T4	135	4G4	14-4c	120	M25	10-16
MVE 3000/15E-70B0	MVE 3000/18E-70B0	MVE 6840/4E-70B0															T4	135	4G4	14-4c	120	M25	10-16
MVE 3000/15E-70C0	MVE 3000/18E-70C0	MVE 6840/4E-70C0															T4	135	4G4	14-4c	120	M25	10-16

(*) Certification level.
(**) Working moment = 2 x static moment.
(***) Working moment = 2 x static moment.

Dimension with coarse degree of accuracy related to UNI 22768/1

Rights reserved to modify technical specifications.

Type 50 Hz	Type 60 Hz	For U.S. Market	Electric Features																								
			power				Current (A max)										Ia/In		-20°C to 40°C		Cable Type			Cable gland		
			Kw		Hp		Winding 230/400					Winding 290/500							ClassII Div.2	II 2D	IEC type	U.S. Market Type: AWG (SOW)	Class temp. °C	IEC type	Clamp. cable Ø	Class temp. °C
			50 hz	60 hz	50 hz	60 hz	230V (Δ)	400V (Y)	230V (Δ)	460V (Y)		290V (Δ)	500V (Y)	330V (Δ)	575V (Y)		50Hz	60Hz	Temp. Class T	Temp. Class (°C)					mm	
							50Hz		60Hz			50Hz		60Hz												
MVE 3800/15E-75A0	MVE 3800/18E-75A0	MVE 8400/4E-75A0	2.20	2.60	2.95	3.49	7.18	4.15	8.30	4.15		5.74	3.32	5.74	3.32		7.0	7.0	T4	135	4G6	12-4c	120	M32	13-20	120
MVE 3800/15E-75C0	MVE 3800/18E-75C0	MVE 8400/4E-75C0																	T4	135	4G6	12-4c	120	M32	13-20	120
MVE 3800/15E-75C1	MVE 3800/18E-75C1	MVE 8400/4E-75C1																	T4	135	4G6	12-4c	120	M32	13-20	120
MVE 4300/15E-75A0	MVE 4300/18E-75A0	MVE 9480/4E-75A0	2.50	3.00	3.35	4.02	7.79	4.50	9.20	4.60		6.23	3.60	6.37	3.68		7.2	7.4	T4	135	4G6	12-4c	120	M32	13-20	120
MVE 4300/15E-75C0	MVE 4300/18E-75C0	MVE 9480/4E-75C0																	T4	135	4G6	12-4c	120	M32	13-20	120
MVE 4300/15E-75C1	MVE 4300/18E-75C1	MVE 9480/4E-75C1																	T4	135	4G6	12-4c	120	M32	13-20	120
MVE 3800/15E-80C0	MVE 3800/18E-80C0	MVE 12260/4E-80C0	3.00	3.50	4.02	4.69	10.38	6.00	12.00	6.00		8.30	4.80	8.30	4.80		7.2	6.5	T4	135	4G6	12-4c	120	M32	13-20	120
MVE 5400/15E-80C0	MVE 5400/18E-80C0	MVE 11880/4E-80C0	3.00	3.50	4.02	4.69	10.38	6.00	12.00	6.00		8.30	4.80	8.30	4.80		7.2	6.5	T4	135	4G6	12-4c	120	M32	13-20	120
MVE 5500/15E-80A0	MVE 5500/18E-80A0	MVE 12260/4E-80A0	2.88	3.45	3.86	4.63	11.25	6.50	11.00	5.50		9.00	5.20	7.61	4.40		7.3	7.2	T4	135	4G6	12-4c	120	M32	13-20	120
							Winding 400 (Δ)				Winding 500															
							400V (Δ)	/	460V (Δ)	/	500V (Δ)	575V (Δ)														
							50Hz		60Hz		50Hz	60Hz														
MVE 7200/15E-85A0	MVE 7200/18E-85A0	MVE 15850/4E-85A0	4.00	4.80	5.36	6.44	8.50	/	8.70	/	6.80	6.96					7.00	7.10	T4	135	4G6	12-4c	120	M32	13-20	120
MVE 7200/15E-85B0	MVE 7200/18E-85B0	MVE 15850/4E-85B0																0.20	T4	135	4G6	12-4c	120	M32	13-20	120
MVE 7200/15E-85C1	MVE 7200/18E-85C1	MVE 15850/4E-85C1																	T4	135	4G6	12-4c	120	M32	13-20	120
MVE 9000/15E-85A0	MVE 9000/18E-85A0	MVE 19800/4E-85A0	7.35	8.50	9.86	11.40	13.40	/	12.00	/	10.72	9.60					7.20	7.20	T4	135	4G6	12-4c	120	M32	13-20	120
MVE 9000/15E-85B0	MVE 9000/18E-85B0	MVE 19800/4E-85B0																0.20	T4	135	4G6	12-4c	120	M32	13-20	120
MVE 9000/15E-85C1	MVE 9000/18E-85C1	MVE 19800/4E-85C1																	T4	135	4G6	12-4c	120	M32	13-20	120
MVE 7200/15E-86A0	MVE 7200/18E-86A0	MVE 15850/4E-86A0	6.00	6.50	8.05	8.72	11.00	/	10.80	/	8.80	8.64					4.70	4.50	T4	135	4G6	12-4c	120	M32	13-20	120
MVE 7200/15E-86B0	MVE 7200/18E-86B0	MVE 15850/4E-86B0																	T4	135	4G6	12-4c	120	M32	13-20	120
MVE 7200/15E-86C0	MVE 7200/18E-86C0	MVE 15850/4E-86C0	6.00	6.50	8.05	8.72	11.00	/	10.80	/	8.80	8.64					4.70	4.50	T4	135	4G6	12-4c	120	M32	13-20	120
MVE 7200/15E-86C1	MVE 7200/18E-86C1	MVE 15850/4E-86C1																	T4	135	4G6	12-4c	120	M32	13-20	120
MVE 9000/15E-86A0	MVE 9000/18E-86A0	MVE 19800/4E-86A0	6.00	6.50	8.05	8.72	11.00	/	10.80	/	8.80	8.64					4.70	4.50	T4	135	4G6	12-4c	120	M32	13-20	120
MVE 9000/15E-86B0	MVE 9000/18E-86B0	MVE 19800/4E-86B0																	T4	135	4G6	12-4c	120	M32	13-20	120
MVE 9000/15E-86C0	MVE 9000/18E-86C0	MVE 19800/4E-86C0	6.00	6.50	8.05	8.72	11.00	/	10.80	/	8.80	8.64					4.70	4.50	T4	135	4G6	12-4c	120	M32	13-20	120
MVE 9000/15E-86C1	MVE 9000/18E-86C1	MVE 19800/4E-86C1																	T4	135	4G6	12-4c	120	M32	13-20	120
MVE 10000/15E-90A0	MVE 10000/18E-90A0	MVE 21000/4E-90A0	5.40	7.00	7.24	9.39	13.00	/	13.00	/	10.40	10.40					6.70	6.60	T4	135	4G6	12-4c	120	M32	13-20	120
MVE 10000/15E-90B0	MVE 10000/18E-90B0	MVE 21000/4E-90B0																	T4	135	4G6	12-4c	120	M32	13-20	120
MVE 10000/15E-91A0	MVE 10000/18E-91A0	MVE 21000/4E-91A0	7.00	8.20	9.39	11.00	13.10	/	13.10	/	10.48	10.48					7.20	7.70	T4	135	4G6	12-4c	120	M32	13-20	120
MVE 10000/15E-91B0	MVE 10000/18E-91B0	MVE 21000/4E-91B0																	T4	135	4G6	12-4c	120	M32	13-20	120

(*) Certification level.
(**) Working moment = 2 x static moment.
(***) Custom footprint (available on request.

Dimension with coarse degree of accurancy related to UNI 22768/1
Rights reserved to modify technical specifications.

Type 50 Hz	Type 60 Hz	For U.S. Market	Electric Features																										
			power				Current (A max)												Ia/In		-20°C to 40°C		Cable Type			Cable gland			
			Kw		Hp		Winding 230/400				Winding 400/690		Winding 290/500								ClassII Div.2	II 2D	IEC type	U.S. Market Type: AWG (SOW)	Class temp. °C	IEC type	Clamp. cable Ø	Class temp. °C
			50 hz	60 hz	50 hz	60 hz	230V (Δ)	400V (Y)	230V (Δ)	460V (Y)	400V (Δ)	690V (Y)	290V (Δ)	500V (Y)	330V (Δ)	575V (Y)	50Hz	60Hz	Temp. Class T	Temp. Class (°C)						mm	
							50Hz		60Hz		50Hz		50Hz		60Hz												
MVE 50/1E-30A0	MVE 50/12E-30A0	MVE 90/6E-30A0	0.12	0.14	0.16	0.19	0.52	0.30	0.80	0.40	0.32	0.38	0.42	0.24	0.55	0.32	2.20	2.20	T4	100	4G2.5	16-4c	80	M20	7-13	80
MVE 50/1E-30AX	MVE 50/12E-30AX	MVE 90/6E-30AX																	T4	100	4G2.5	16-4c	80	M20	7-13	80
MVE 100/1E-30A0	MVE 100/12E-30A0	MVE 220/6E-30A0	0.12	0.14	0.16	0.19	0.52	0.30	0.80	0.40	0.32	0.38	0.42	0.24	0.55	0.32	2.20	2.20	T4	100	4G2.5	16-4c	80	M20	7-13	80
MVE 100/1E-30AX	MVE 100/12E-30AX	MVE 220/6E-30AX																	T4	100	4G2.5	16-4c	80	M20	7-13	80
MVE 200/1E-40A0	MVE 200/12E-40A0	MVE 410/6E-40A0	0.15	0.18	0.20	0.24	1.12	0.65	1.25	0.63	0.37	0.42	0.90	0.52	0.87	0.50	2.20	2.20	T4	135	4G2.5	16-4c	120	M20	7-13	120
MVE 200/1E-40AX	MVE 200/12E-40AX	MVE 410/6E-40AX																	T4	135	4G2.5	16-4c	120	M20	7-13	120
MVE 300/1E-50A0	MVE 300/12E-50A0	MVE 680/6E-50A0	0.25	0.30	0.34	0.40	1.16	0.67	1.28	0.64	0.68	0.72	0.93	0.54	0.89	0.51	2.70	2.70	T4	135	4G2.5	16-4c	120	M20	7-13	120
MVE 300/1E-50C0	MVE 300/12E-50C0	MVE 680/6E-50C0																	T4	135	4G2.5	16-4c	120	M20	7-13	120
MVE 500/1E-50A0	MVE 500/12E-50A0	MVE 1100/6E-50A0	0.35	0.40	0.47	0.54	2.11	1.22	2.30	1.15	0.60	0.64	1.69	0.98	1.59	0.92	3.00	2.90	T4	135	4G2.5	16-4c	120	M20	7-13	120
MVE 500/1E-50C0	MVE 500/12E-50C0	MVE 1100/6E-50C0																	T4	135	4G2.5	16-4c	120	M20	7-13	120
MVE 510/1E-50A0	MVE 510/12E-50A0	MVE 1600/6E-50A0	0.35	0.40	0.47	0.54	2.08	1.20	2.30	1.15	0.60	0.64	1.66	0.96	1.59	0.92	3.00	2.90	T4	135	4G2.5	16-4c	120	M20	7-13	120
MVE 510/1E-50C0	MVE 510/12E-50C0	MVE 1600/6E-50C0																	T4	135	4G2.5	16-4c	120	M20	7-13	120
MVE 800/1E-60A0	MVE 800/12E-60A0	MVE 1730/6E-60A0	0.75	0.80	1.01	1.07	2.46	1.42	2.64	1.32	0.66	0.70	1.97	1.14	1.83	1.06	3.40	3.30	T4	135	4G4	14-4c	120	M25	10-16	120
MVE 800/1E-60C0	MVE 800/12E-60C0	MVE 1730/6E-60C0																	T4	135	4G4	14-4c	120	M25	10-16	120
MVE 1100/1E-60A0	MVE 1100/12E-60A0	MVE 2350/6E-60A0	0.75	0.80	1.01	1.07	2.46	1.42	2.64	1.32	0.59	0.64	1.97	1.14	1.83	1.06	3.40	3.30	T4	135	4G4	14-4c	120	M25	10-16	120
MVE 1100/1E-60C0	MVE 1100/12E-60C0	MVE 2350/6E-60C0																	T4	135	4G4	14-4c	120	M25	10-16	120
MVE 1500/1E-60A0	MVE 1500/12E-60A0	MVE 3090/6E-60A0	0.90	1.08	1.21	1.45	3.11	1.80	4.00	2.00			2.49	1.44	2.77	1.60	3.50	3.50	T4	135	4G4	14-4c	120	M25	10-16	120
MVE 1500/1E-60C0	MVE 1500/12E-60C0	MVE 3090/6E-60C0																	T4	135	4G4	14-4c	120	M25	10-16	120
MVE 1600/1E-70A0	MVE 1600/12E-70A0	MVE 3580/6E-70A0	0.90	1.08	1.21	1.45	4.15	2.40	4.60	2.30	0.63	0.68	3.32	1.92	3.18	1.84	3.90	3.80	T4	135	4G4	14-4c	120	M25	10-16	120
MVE 1600/1E-70B0	MVE 1600/12E-70B0	MVE 3580/6E-70B0																	T4	135	4G4	14-4c	120	M25	10-16	120
MVE 1600/1E-70C0	MVE 1600/12E-70C0	MVE 3580/6E-70C0																	T4	135	4G4	14-4c	120	M25	10-16	120
MVE 2100/1E-70A0	MVE 2100/12E-70A0	MVE 4740/6E-70A0	1.50	1.80	2.01	2.41	5.19	3.00	6.40	3.20	0.70	0.72	4.15	2.40	4.43	2.56	4.50	4.60	T4	135	4G4	14-4c	120	M25	10-16	120
MVE 2100/1E-70B0	MVE 2100/12E-70B0	MVE 4740/6E-70B0																	T4	135	4G4	14-4c	120	M25	10-16	120
MVE 2100/1E-70C0	MVE 2100/12E-70C0	MVE 4740/6E-70C0																	T4	135	4G4	14-4c	120	M25	10-16	120
MVE 2200/1E-70A0	MVE 2200/12E-70A0	MVE 4850/6E-70A0	1.50	1.80	2.01	2.41	5.19	3.00	6.40	3.20	0.70	0.72	4.15	2.40	4.43	2.56	4.50	4.60	T4	135	4G4	14-4c	120	M25	10-16	120
MVE 2200/1E-70B0	MVE 2200/12E-70B0	MVE 4850/6E-70B0																	T4	135	4G4	14-4c	120	M25	10-16	120
MVE 2200/1E-70C0	MVE 2200/12E-70C0	MVE 4850/6E-70C0																	T4	135	4G4	14-4c	120	M25	10-16	120
MVE 2600/1E-75A0	MVE 2600/12E-75A0	MVE 5690/6E-75A0	1.96	2.10	2.63	2.82	7.09	4.10	8.00	4.00	0.68	0.70	5.67	3.28	5.54	3.20	5.00	5.00	T4	135	4G6	12-4c	120	M32	13-20	120
MVE 2600/1E-75C0	MVE 2600/12E-75C0	MVE 5690/6E-75C0																	T4	135	4G6	12-4c	120	M32	13-20	120
MVE 2600/1E-75C1	MVE 2600/12E-75C1	MVE 5690/6E-75C1																	T4	135	4G6	12-4c	120	M32	13-20	120
MVE 3000/1E-75A0	MVE 3000/12E-75A0	MVE 6620/6E-75A0	2.20	2.40	2.95	3.22	7.79	4.50	8.60	4.30	0.72	0.75	6.23	3.60	5.95	3.44	5.20	5.20	T4	135	4G6	12-4c	120	M32	13-20	120
MVE 3000/1E-75C0	MVE 3000/12E-75C0	MVE 6620/6E-75C0																	T4	135	4G6	12-4c	120	M32	13-20	120
MVE 3000/1E-75C1	MVE 3000/12E-75C1	MVE 6620/6E-75C1																	T4	135	4G6	12-4c	120	M32	13-20	120
MVE 3700/1E-75A0	MVE 3700/12E-75A0	MVE 8160/6E-75A0	2.20	2.40	2.95	3.22	7.79	4.50	8.60	4.30	0.72	0.75	6.23	3.60	5.95	3.44	5.20	5.20	T4	135	4G6	12-4c	120	M32	13-20	120
MVE 3700/1E-75C0	MVE 3700/12E-75C0	MVE 8160/6E-75C0																	T4	135	4G6	12-4c	120	M32	13-20	120
MVE 3700/1E-75C1	MVE 3700/12E-75C1	MVE 8160/6E-75C1																	T4	135	4G6	12-4c	120	M32	13-20	120
MVE 4700/1E-80C0	MVE 4700/12E-80C0	MVE 10380/6E-80C0	3.20	3.90	4.29	5.23	11.25	6.50	13.90	6.95	0.64	0.69	9.00	5.20	9.62	5.56	5.70	5.90	T4	135	4G6	12-4c	120	M32	13-20	120
MVE 5200/1E-80C0	MVE 5200/12E-80C0	MVE 11500/6E-80C0	3.80	4.00	5.10	5.36	11.97	6.92	12.72	6.36	0.69	0.74	9.58	5.54	8.80	5.09	5.70	5.70	T4	135	4G6	12-4c	120	M32	13-20	120
MVE 3800/1E-80A0	MVE 3800/12E-80A0	MVE 8450/6E-80A0	2.50	3.00	3.35	4.02	9.52	5.50	10.60	5.30	0.71	0.75	7.61	4.40	7.34	4.24	6.10	6.20	T4	135	4G6	12-4c	120	M32	13-20	120
MVE 3800/1E-80C0	MVE 3800/12E-80C0	MVE 8450/6E-80C0	2.50	3.00	3.35	4.02	9.52	5.50	10.60	5.30	0.71	0.75	7.61	4.40	7.34	4.24	0.20	0.20	T4	135	4G6	12-4c	120	M32	13-20	120
MVE 4700/1E-80A0	MVE 4700/12E-80A0	MVE 10370/6E-80A0	3.20	3.90	4.29	5.23	11.25	6.50	13.90	6.95	0.64	0.69	9.00	5.20	9.62	5.56	5.70	5.90	T4	135	4G6	12-4c	120	M32	13-20	120

(*) Certification level.
(**) Working moment = 2 x static moment.
(***) Working moment = 2 x static moment.

Dimension with coarse degree of accurancy related to UNI 22768/1
Rights reserved to modify technical specifications.

Type 50 Hz	Type 60 Hz	For U.S. Market	Electric Features																						
			power				Current (A max)								Ia/In		-20°C to 40°C		Cable Type			Cable gland			
			Kw		Hp		Winding 230/400					Winding 290/500					ClassII Div.2	II 2D	IEC type	U.S. Market Type: AWG (SOW)	Class temp. °C	IEC type	Clamp. cable Ø	Class temp. °C	
			50 hz	60 hz	50 hz	60 hz	230V (Δ)	400V (Y)	230V (Δ)	460V (Y)		290V (Δ)	500V (Y)	330V (Δ)	575V (Y)	50Hz	60Hz	Temp. Class	Temp. Class							
							50Hz		60Hz			50Hz		60Hz				T	(°C)					mm		
MVE 5200/1E-85A0	MVE 5200/12E-85A0	MVE 11500/6E-85A0															T4	135	4G6	12-4c	120	M32	13-20	120	
MVE 5200/1E-85B0	MVE 5200/12E-85B0	MVE 11500/6E-85B0	3.80	4.00	5.10	5.36	11.97	6.92	12.72	6.36		9.58	5.54	8.80	5.09	5.70	5.70	T4	135	4G6	12-4c	120	M32	13-20	120	
MVE 5200/1E-85C1	MVE 5200/12E-85C1	MVE 11500/6E-85C1															T4	135	4G6	12-4c	120	M32	13-20	120	
MVE 6500/1E-85A0	MVE 6500/12E-85A0	MVE 14360/6E-85A0															T4	135	4G6	12-4c	120	M32	13-20	120	
MVE 6500/1E-85B0	MVE 6500/12E-85B0	MVE 14360/6E-85B0	4.30	5.00	5.77	6.71	13.42	7.76	15.62	7.81		10.74	6.21	10.81	6.25	6.40	6.20	T4	135	4G6	12-4c	120	M32	13-20	120	
MVE 6500/1E-85C1	MVE 6500/12E-85C1	MVE 14360/6E-85C1															T4	135	4G6	12-4c	120	M32	13-20	120	
MVE 6500/1E-86C0	MVE 6500/12E-86C0	MVE 14360/6E-86C0	4.60	5.50	6.17	7.38	15.57	9.00	20	10.00		12.46	7.20	13.84	8.00	6	6.20	T4	135	4G6	12-4c	120	M32	13-20	120	
MVE 7200/1E-86C0	MVE 7200/12E-86C0	MVE 15800/6E-86C0	4.60	5.50	6.17	7.38	15.57	9.00	20	10.00		12.46	7.20	13.84	8.00	6	6.20	T4	135	4G6	12-4c	120	M32	13-20	120	
							Winding 400 (Δ)				Winding 500														
							400V (Δ)	/	460V (Δ)	/	500V (Δ)	575V (Δ)													
							50Hz		60Hz		50Hz	60Hz													
MVE 8000/1E-85A0	MVE 8000/12E-85A0	MVE 17750/6E-85A0															T4	135	4G6	12-4c	120	M32	13-20	120	
MVE 8000/1E-85B0	MVE 8000/12E-85B0	MVE 17750/6E-85B0	5.50	6.60	7.38	8.85	12.60	/	11.60	/	10.08	9.28				6.20	6.40	T4	135	4G6	12-4c	120	M32	13-20	120	
MVE 8000/1E-85C1	MVE 8000/12E-85C1	MVE 17750/6E-85C1																T4	135	4G6	12-4c	120	M32	13-20	120	
MVE 9000/1E-85A0	MVE 9000/12E-85A0	MVE 19120/6E-85A0																T4	135	4G6	12-4c	120	M32	13-20	120	
MVE 9000/1E-85B0	MVE 9000/12E-85B0	MVE 19120/6E-85B0	6.20	7.45	8.31	9.99	13.20	/	12.60	/	10.56	10.08				6.50	6.40	T4	135	4G6	12-4c	120	M32	13-20	120	
MVE 9000/1E-85C1	MVE 9000/12E-85C1	MVE 19120/6E-85C1																T4	135	4G6	12-4c	120	M32	13-20	120	
MVE 8000/1E-86A0	MVE 8000/12E-86A0	MVE 17750/6E-86A0	4.60	5.50	6.17	7.38	9.00	/	10.00	/	7.20	8.00				6.00	6.20	T4	135	4G6	12-4c	120	M32	13-20	120	
MVE 8000/1E-86B0	MVE 8000/12E-86B0	MVE 17750/6E-86B0			0.00	0.00												T4	135	4G6	12-4c	120	M32	13-20	120	
MVE 9000/1E-86A0	MVE 9000/12E-86A0	MVE 19120/6E-86A0	4.60	5.50	6.17	7.38	9.00	/	10.00	/	7.20	8.00				6.00	6.20	T4	135	4G6	12-4c	120	M32	13-20	120	
MVE 9000/1E-86B0	MVE 9000/12E-86B0	MVE 19120/6E-86B0																T4	135	4G6	12-4c	120	M32	13-20	120	
MVE9800/1E-86C1	MVE9800/12E-86C1	MVE21600/6E-86C1	4.60	5.50	6.17	7.38	9.00	/	10.00	/	7.20	8.00				6.00	6.20	T4	135	4G6	12-4c	120	M32	13-20	120	
MVE 11200/1E-86C1	MVE 11200/12E-86C1	MVE 24700/6E-86C1	5.20	6.10	6.97	8.18	10.00	/	10.00	/	8.00	8.00				6.70	7.20	T4	135	4G6	12-4c	120	M32	13-20	120	
MVE 8000/1E-86C0	MVE 8000/12E-86C0	MVE 17750/6E-86C0	4.60	5.50	6.17	7.38	9.00	/	10.00	/	7.20	8.00				5.90	6.20	T4	135	4G6	12-4c	120	M32	13-20	120	
MVE 9000/1E-86C0	MVE 9000/12E-86C0	MVE 19120/6E-86C0	4.60	5.50	6.17	7.38	9.00	/	10.00	/	7.20	8.00				5.90	6.20	T4	135	4G6	12-4c	120	M32	13-20	120	
MVE 10000/1E-90A0	MVE 10000/12E-90A0	MVE 21400/6E-90A0	6.10	6.40	8.18	8.58	14.00	/	12.70	/	11.20	10.16				6.60	6.60	T4	135	4G6	12-4c	120	M32	13-20	120	
MVE 10000/1E-90B0	MVE 10000/12E-90B0	MVE 21400/6E-90B0																T4	135	4G6	12-4c	120	M32	13-20	120	
MVE 13000/1E-90A0	MVE 13000/12E-90A0	MVE 28660/6E-90A0	7.50	8.30	10.06	11.13	16.40	/	16.00	/	13.12	12.80				6.40	6.50	T4	135	4G6	12-4c	120	M32	13-20	120	
MVE 13000/1E-90B0	MVE 13000/12E-90B0	MVE 28660/6E-90B0																T4	135	4G6	12-4c	120	M32	13-20	120	
MVE 10000/1E-91A0	MVE 10000/12E-91A0	MVE 21400/6E-91A0	6.40	7.70	8.58	10.33	13.00	/	14.50	/	10.40	11.60				6.00	6.00	T4	135	4G6	12-4c	120	M32	13-20	120	
MVE 10000/1E-91B0	MVE 10000/12E-91B0	MVE 21400/6E-91B0																T4	135	4G6	12-4c	120	M32	13-20	120	
MVE 11400/1E-91A0	MVE 11400/12E-91A0	MVE 25100/6E-91A0	6.40	7.70	8.58	10.33	13.00	/	14.50	/	10.40	6.00				6.00	6.00	T4	135	4G6	12-4c	120	M32	13-20	120	
MVE 11400/1E-91B0	MVE 11400/12E-91B0	MVE 25100/6E-91B0																T4	135	4G6	12-4c	120	M32	13-20	120	
MVE 13000/1E-91A0	MVE 13000/12E-91A0	MVE 28660/6E-91A0	8.00	8.90	10.73	11.94	17.20	/	18.10	/	13.76	14.48				5.60	6.30	T4	135	4G6	12-4c	120	M32	13-20	120	
MVE 13000/1E-91B0	MVE 13000/12E-91B0	MVE 28660/6E-91B0																T4	135	4G6	12-4c	120	M32	13-20	120	

(*) Certification level.
(**) Working moment = 2 x static moment.
(***) Custom footprint (available on request.

Dimension with coarse degree of accurancy related to UNI 22768/1
Rights reserved to modify technical specifications.

Electric Feaures																													
Type 50 Hz	Type 60 Hz	For U.S. Market	power				Current (A max)								Power Factor		Ia/In		-20°C to 40°C		Cable Type				Cable gland			
			kw		Hp		Winding 230/400				Winding 290/500								Classll Div.2	II 2D	IEC type	UL5. Market Type: AWG (SOW)	Class temp. °C	IEC type	Clamp. cable Ø		Class temp. °C
			50 hz	60 hz	50 hz	60 hz	230V (Δ)	400V (Y)	230V (Δ)	460V (Y)	290V (Δ)	500V (Y)	330V (Δ)	575V (Y)	50Hz	60Hz	50Hz	60Hz	Temp. Class T	Temp. Class (°C)					mm		
			50Hz				50Hz		60Hz																				
MVE 150/075E-40A0	MVE 150/090E-40A0	MVE 330/8E-40A	0.23	0.25	0.31	0.34	1.97	1.14	2.28	1.14	1.58	0.91	1.58	0.91	0.29	0.37	1.7	1.7	T4	135	462.5	16-4c	120	M20	7-13		120
MVE 150/075E-40AX	MVE 150/090E-40AX	MVE 330/8E-40AX															0.2	0.2	T4	135	462.5	16-4c	120	M20	7-13		120
MVE 250/075E-50A0	MVE 250/090E-50A0	MVE 550/8E-50A	0.25	0.30	0.34	0.40	1.56	0.90	1.78	0.89	1.25	0.72	1.23	0.71	0.41	0.45	1.9	1.9	T4	135	462.5	16-4c	120	M20	7-13		120
MVE 250/075E-50C0	MVE 250/090E-50C0	MVE 550/8E-50CO															0.2	0.2	T4	135	462.5	16-4c	120	M20	7-13		120
MVE 400/075E-50A0	MVE 400/090E-50A0	MVE 880/8E-50A0	0.25	0.30	0.34	0.40	1.56	0.90	1.78	0.89	1.25	0.72	1.23	0.71	0.41	0.45	2.1	2.1	T4	135	462.5	16-4c	120	M20	7-13		120
MVE 400/075E-50C0	MVE 400/090E-50C0	MVE 880/8E-50CO															0.2	0.2	T4	135	462.5	16-4c	120	M20	7-13		120
MVE 650/075E-60A0	MVE 650/090E-60A0	MVE 1430/8E-60A0	0.37	0.45	0.50	0.60	2.08	1.20	2.40	1.20	1.66	0.96	1.66	0.96	0.56	0.62	2.4	2.4	T4	135	4G4	14-4c	120	M25	10-16		120
MVE 650/075E-60C0	MVE 650/090E-60C0	MVE 1430/8E-60CO															0.2	0.2	T4	135	4G4	14-4c	120	M25	10-16		120
MVE 900/075E-60A0	MVE 900/090E-60A0	MVE 2000/8E-60A0	0.45	0.54	0.60	0.72	2.13	1.23	2.58	1.29	1.70	0.98	1.79	1.03	0.57	0.62	2.7	2.7	T4	135	4G4	14-4c	120	M25	10-16		120
MVE 900/075E-60C0	MVE 900/090E-60C0	MVE 2000/8E-60CO															0.2	0.2	T4	135	4G4	14-4c	120	M25	10-16		120
MVE 1300/075E-70A0	MVE 1300/090E-70A0	MVE 2900/8E-70A0	0.75	0.90	1.01	1.21	3.81	2.20	4.40	2.20	3.04	1.76	3.04	1.76	0.69	0.72	3.2	3.2	T4	135	4G4	14-4c	120	M25	10-16		120
MVE 1300/075E-70B0	MVE 1300/090E-70B0	MVE 2900/8E-70B0															0.2	0.2	T4	135	4G4	14-4c	120	M25	10-16		120
MVE 1300/075E-70C0	MVE 1300/090E-70C0	MVE 2900/8E-70CO															0.2	0.2	T4	135	4G4	14-4c	120	M25	10-16		120
MVE 2100/075E-75A0	MVE 2100/090E-75A0	MVE 4620/8E-75A0	1.00	1.20	1.34	1.61	4.86	2.81	5.78	2.89	3.89	2.25	4.00	2.31	0.64	0.65	4.4	4.3	T4	135	4G6	12-4c	120	M32	13-20		120
																	0.2	0.2									
																	0.2	0.2									
MVE 2100/075E-75C0	MVE 2100/090E-75C0	MVE 4620/8E-75CO																	T4	135	4G6	12-4c	120	M32	13-20		120
MVE 2100/075E-75C1	MVE 2100/090E-75C1	MVE 4620/8E-75C1																	T4	135	4G6	12-4c	120	M32	13-20		120
MVE 3100/075E-80A0	MVE 3100/090E-80A0	MVE 6820/8E-80A0	2.00	2.30	2.68	3.08	7.79	4.50	8.80	4.40	6.23	3.60	6.09	3.52	0.68	0.73	4.2	4.2	T4	135	4G6	12-4c	120	M32	13-20		120
MVE 3800/075E-80A0	MVE 3800/090E-80A0	MVE 8360/8E-80A0	2.50	3.00	3.35	4.02	10.38	6.00	12.00	6.00	8.30	4.80	8.30	4.80	0.66	0.67	4.1	4.2	T4	135	4G6	12-4c	120	M32	13-20		120
MVE 3800/075E-80C0	MVE 3800/090E-80C0	MVE 8360/8E-80CO															0.2	0.2	T4	135	4G6	12-4c	120	M32	13-20		120
MVE 4200/075E-80C0	MVE 4200/090E-80C0	MVE 9240/8E-80CO	2.90	3.40	3.89	4.56	12.37	7.15	13.00	6.50	9.90	5.72	9.00	5.20	0.69	0.71	4.0	3.9	T4	135	4G6	12-4c	120	M32	13-20		120
MVE 5300/075E-80C0	MVE 5300/090E-80C0	MVE 11660/8E-80CO	3.70	4.30	4.96	5.77	13.84	8.00	16.40	8.20	11.07	6.40	11.35	6.56	0.66	0.67	4.0	4.2	T4	135	4G6	12-4c	120	M32	13-20		120
MVE 4200/075E-85A0	MVE 4200/090E-85A0	MVE 9240/8E-85A0															4.0	3.9	T4	135	4G6	12-4c	120	M32	13-20		120
MVE 4200/075E-85B0	MVE 4200/090E-85B0	MVE 9240/8E-85BO	2.90	3.40	3.89	4.56	11.25	6.50	13.00	6.50	9.00	5.20	9.00	5.20	0.69	0.71	0.2	0.2	T4	135	4G6	12-4c	120	M32	13-20		120
MVE 4200/075E-85C1	MVE 4200/090E-85C1	MVE 9240/8E-85C1															0.2	0.2	T4	135	4G6	12-4c	120	M32	13-20		120
MVE 5300/075E-85A0	MVE 5300/090E-85A0	MVE 11660/8E-85A0															4.0	4.4	T4	135	4G6	12-4c	120	M32	13-20		120
MVE 5300/075E-85B0	MVE 5300/090E-85B0	MVE 11660/8E-85BO	3.70	4.30	4.96	5.77	13.84	8.00	16.40	8.20	11.07	6.40	11.35	6.56	0.72	0.76	0.2	0.2	T4	135	4G6	12-4c	120	M32	13-20		120
MVE 5300/075E-85C1	MVE 5300/090E-85C1	MVE 11660/8E-85C1															0.2	0.2	T4	135	4G6	12-4c	120	M32	13-20		120

(*) Certification level.
(**) Working moment = 2 x static moment.
(***) Working moment = 2 x static moment.

Dimension with coarse degree of accurancy related to UNI 22768/1
Rights reserved to modify technical specifications.

Type 50 Hz	Type 60 Hz	For U.S. Market	Electric Feaures																									
			power				Current (A max)								Power Factor		Ia/In		-20°C to 40°C		Cable Type			Cable gland				
			Kw		Hp		Winding 230/400					Winding 290/500							ClassII Div.2	II 2D	IEC type	U.S. Market Type: AWG (SOW)	Class temp. °C	IEC type	Clamp. cable Ø	Class temp. °C		
			50 hz	60 hz	50 hz	60 hz	230V (Δ)	400V (Y)	230V (Δ)	460V (Y)		290V (Δ)	500V (Y)	330V (Δ)	575V (Y)	50Hz	60Hz	50Hz	60Hz	Temp. Class	Temp. Class								
							50Hz		60Hz			50Hz		60Hz					T	(°C)					mm			
MVE 6500/075E-85A0	MVE 6500/090E-85A0	MVE 14300/8E-85A0	3.80	4.20	5.10	5.63	15.19	8.78	16.60	8.30		12.15	7.02	11.49	6.64	0.75	0.78	3.8	4.2	T4	135	4G6	12-4c	120	M32	13-20	120		
MVE 6500/075E-85B0	MVE 6500/090E-85B0	MVE 14300/8E-85B0																0.2	0.2	T4	135	4G6	12-4c	120	M32	13-20	120		
MVE 6500/075E-85C1	MVE 6500/090E-85C1	MVE 14300/8E-85C1																0.2	0.2	T4	135	4G6	12-4c	120	M32	13-20	120		
MVE 5300/075E-86C0	MVE 5300/090E-86C0	MVE 11660/8E-86C0	3.90	4.70	5.23	6.30	14.36	8.30	16.60	8.30		11.49	6.64	11.49	6.64			3.7	3.7	T4	135	4G6	12-4c	120	M32	13-20	120		
MVE 6500/075E-86C0	MVE 6500/090E-86C0	MVE 14300/8E-86C0	3.90	4.70	5.23	6.30	14.36	8.30	16.60	8.30		11.49	6.64	11.49	6.64			4.2	4.2	T4	135	4G6	12-4c	120	M32	13-20	120		
							Winding 400 (Δ)				Winding 500																		
							400V (Δ)		460V (Δ)	/	500V (Δ)	575V (Δ)																	
							50Hz		60Hz		50Hz	60Hz																	
MVE 10000/075E-90A0	MVE 10000/090E-90A0	MVE 22000/8E-90A0	6.80	7.50	9.12	10.06	13.50		12.50	/	10.80	10.00			0.74	0.75	3.7	4.4	T4	135	4G6	12-4c	120	M32	13-20	120		
MVE 10000/075E-90B0	MVE 10000/090E-90B0	MVE 22000/8E-90B0																0.2	T4	135	4G6	12-4c	120	M32	13-20	120		
MVE 10000/075E-91A0	MVE 10000/090E-91A0	MVE 22000/8E-91A0	6.00	7.00	8.05	9.39	14.40		14.00	/	11.52	11.20					4.7	4.7	T4	135	4G6	12-4c	120	M32	13-20	120		
MVE 10000/075E-91B0	MVE 10000/090E-91B0	MVE 22000/8E-91B0																0.2	T4	135	4G6	12-4c	120	M32	13-20	120		

(*) Certification level.
(**) Working moment = 2 x static moment.
(***) Custom footprint (available on request.

Dimension with coarse degree of accurancy related to UNI 22768/1
Rights reserved to modify technical specifications.

Type 50 Hz	Type 60 Hz	For U.S. Market	Electric Features																-20°C to 55°C		Cable Type			Cable gland		
			power				Current (A max)								Ia/In				ClassII Div.2	II 2D	IEC type	U.S. Market Type: AWG (SOW)	Class temp. °C	IEC type	Clamp. cable Ø	Class temp. °C
			Kw		Hp		Winding 230/400				Winding 290/500															
			50 hz	60 hz	50 hz	60 hz	230V (Δ)	400V (Y)	230V (Δ)	460V (Y)	290V (Δ)	500V (Y)	330V (Δ)	575V (Y)	50Hz	60Hz			Temp. Class	Temp. Class					mm	
							50Hz		60Hz		50Hz		60Hz						T	(°C)						
MVE 60/3H-10A0	MVE 60/36H-10A0	MVE 160/2H-10A0	0.09	0.09	0.12	0.12	0.43	0.25	0.46	0.23	0.35	0.20	0.32	0.18	3.2	3.2			T4	115	4G1.5	18-4c	85	M16	5-10	85
MVE 100/3H-10A0	MVE 100/36H-10A0	MVE 220/2H-10A0	0.09	0.09	0.12	0.12	0.43	0.25	0.46	0.23	0.35	0.20	0.32	0.18	3.2	3.2			T4	115	4G1.5	18-4c	85	M16	5-10	85
MVE 200/3H-20A0	MVE 200/36H-20A0	MVE 440/2H-20A0	0.15	0.18	0.20	0.24	0.61	0.35	0.60	0.30	0.48	0.28	0.42	0.24	3.5	3.5			T4	115	4G2.5	16-4c	85	M20	7-13	85
MVE 200/3H-20AX	MVE 200/36H-20AX	MVE 440/2H-20AX																	T4	115	4G2.5	16-4c	85	M20	7-13	85
MVE 200/3H-23A0	MVE 200/36H-23A0	MVE 440/2H-23A0	0.15	0.18	0.20	0.24	0.61	0.35	0.60	0.30	0.48	0.28	0.42	0.24	3.5	3.5			T4	115	4G2.5	16-4c	85	M20	7-13 7-13 7-13 7-13	85
MVE 300/3H-30A0	MVE 300/36H-30A0	MVE 690/2H-30A0	0.25	0.28	0.34	0.38	0.90	0.52	0.90	0.45	0.72	0.42	0.62	0.36	3.8	3.7			T4	115	4G2.5	16-4c	85	M20	7-13	85
MVE 300/3H-30AX	MVE 300/36H-30AX	MVE 690/2H-30AX																	T4	115	4G2.5	16-4c	85	M20	7-13	85
MVE 400/3H-30A0	MVE 400/36H-30A0	MVE 890/2H-30A0	0.27	0.33	0.36	0.44	1.00	0.58	1.20	0.60	0.80	0.46	0.83	0.48	3.7	3.7			T4	115	4G2.5	16-4c	85	M20	7-13	85
MVE 400/3H-30AX	MVE 400/36H-30AX	MVE 890/2H-30AX																	T4	115	4G2.5	16-4c	85	M20	7-13	85
MVE 500/3H-40A0	MVE 500/36H-40A0	MVE 1200/2H-40A0	0.50	0.58	0.67	0.78	1.66	0.96	1.94	0.97	1.33	0.77	1.34	0.78	4.2	4.4			T4	150	4G2.5	16-4c	135	M20	7-13	135
MVE 500/3H-40AX	MVE 500/36H-40AX	MVE 1200/2H-40AX																	T4	150	4G2.5	16-4c	135	M20	7-13	135
MVE 700/3H-40A0	MVE 700/36H-40A0	MVE 1700/2H-40A0	0.59	0.61	0.79	0.82	2.16	1.25	2.48	1.24	1.73	1.00	1.72	0.99	4.5	5.2			T4	150	4G2.5	16-4c	135	M20	7-13	135
MVE 700/3H-40AX	MVE 700/36H-40AX	MVE 1700/2H-40AX																	T4	150	4G2.5	16-4c	135	M20	7-13	135
MVE 800/3H-50A0	MVE 800/36H-50A0	MVE 1800/2H-50A0	0.70	0.84	0.94	1.13	2.51	1.45	3.00	1.50	2.01	1.16	2.08	1.20	4.0	4.0			T4	150	4G2.5	16-4c	135	M20	7-13	135
MVE 800/3H-50C0	MVE 800/36H-50C0	MVE 1800/2H-50C0																	T4	150	4G2.5	16-4c	135	M20	7-13	135
MVE 1200/3H-50A0	MVE 1200/36H-50A0	MVE 2300/2H-50A0	0.95	1.15	1.27	1.54	3.20	1.85	3.90	1.95	2.56	1.48	2.70	1.56	4.6	4.7			T4	150	4G2.5	16-4c	135	M20	7-13	135
MVE 1200/3H-50C0	MVE 1200/36H-50C0	MVE 2300/2H-50C0																	T4	150	4G2.5	16-4c	135	M20	7-13	135
MVE 1300/3H-50A0	MVE 1300/36H-50A0	MVE 3100/2H-50A0	1.30	1.38	1.74	1.85	4.22	2.44	4.50	2.25	3.38	1.95	3.11	1.80	5.4	5.2			T4	150	4G2.5	16-4c	135	M20	7-13	135
MVE 1300/3H-51A0	MVE 1300/36H-51A0	MVE 3100/2H-51A0																	T4	150	4G2.5	16-4c	135	M20	7-13	135
MVE 1300/3H-50C0	MVE 1300/36H-50C0	MVE 3100/2H-50C0																	T4	150	4G2.5	16-4c	135	M20	7-13	135
MVE 1150/3H-60C0	MVE 1150/36H-60C0	MVE 2500/2H-60C0	1.54	1.60	2.07	2.15	5.09	2.94	5.22	2.61	4.07	2.35	3.61	2.09	6.1	6.4			T4	150	4G4	14-4c	135	M25	10-16	135
MVE 1600/3H-60A0	MVE 1600/36H-60A0	MVE 3500/2H-60A0	1.54	1.60	2.07	2.15	5.09	2.94	5.22	2.61	4.07	2.35	3.61	2.09	6.1	6.4			T4	150	4G4	14-4c	135	M25	10-16	135
MVE 1600/3H-60C0	MVE 1600/36H-60C0	MVE 3500/2H-60C0																	T4	150	4G4	14-4c	135	M25	10-16	135
MVE 2000/3H-60A0	MVE 2000/36H-60A0	MVE 4100/2H-60A0	2.00	2.10	2.68	2.82	6.49	3.75	6.84	3.42	5.19	3.00	4.73	2.74	6.7	6.6			T4	150	4G4	14-4c	135	M25	10-16	135
MVE 2000/3H-60C0	MVE 2000/36H-60C0	MVE 4100/2H-60C0																	T4	150	4G4	14-4c	135	M25	10-16	135
MVE 2300/3H-60A0	MVE 2300/36H-60A0	MVE 5100/2H-60A0	2.40	2.45	3.22	3.29	7.68	4.44	6.90	3.45	6.14	3.55	4.77	2.76	6.2	6.5			T4	150	4G4	14-4c	135	M25	10-16	135
MVE 2300/3H-60C0	MVE 2300/36H-60C0	MVE 5100/2H-60C0																	T4	150	4G4	14-4c	135	M25	10-16	135
MVE 3200/3H-75A1	MVE 3200/36H-75A1	MVE 7600/2H-75A1	2.76	2.90	3.70	3.89	9.17	5.30	9.22	4.61	7.34	4.24	6.38	3.69	8.5	8.4			T4	150	4G6	12-4c	135	M32	13-20	135
MVE 3200/3H-75C0	MVE 3200/36H-75C0	MVE 7600/2H-75C0																	T4	150	4G6	12-4c	135	M32	13-20	135
MVE 3200/3H-75C1	MVE 3200/36H-75C1	MVE 7600/2H-75C1																	T4	150	4G6	12-4c	135	M32	13-20	135

(*) Certification level.
(**) Working moment = 2 x static moment.
(***) Working moment = 2 x static moment.

Dimension with coarse degree of accurancy related to UNI 22768/1
Rights reserved to modify technical specifications.

Type 50 Hz	Type 60 Hz	For U.S. Market	Electric Features																									
			power				Current (A max)												Ia/In		-20°C to 55°C		Cable Type			Cable gland		
			Kw		Hp		Winding 230/400					Winding 290/500							ClassII Div.2	II 2D	IEC type	U.S. Market Type: AWG (SOW)	Class temp. °C	IEC type	Clamp. cable Ø	Class temp. °C
			50 hz	60 hz	50 hz	60 hz	230V (Δ)	400V (Y)	230V (Δ)	460V (Y)		290V (Δ)	500V (Y)	330V (Δ)	575V (Y)	50Hz	60Hz		Temp. Class	Temp. Class					mm	
							50Hz		60Hz			50Hz		60Hz					T	(°C)						
MVE 4000/3H-75A1	MVE 4000/36H-75A1	MVE 8800/2H-75A1																	T4	150	4G6	12-4c	135	M32	13-20	135
MVE 4000/3H-75C0	MVE 4000/36H-75C0	MVE 8800/2H-75C0	2.90	2.90	3.89	3.89	9.17	5.30	9.22	4.61		7.34	4.24	6.38	3.69	8.7	9.9		T4	150	4G6	12-4c	135	M32	13-20	135
MVE 4000/3H-75C1	MVE 4000/36H-75C1	MVE 8800/2H-75C1																	T4	150	4G6	12-4c	135	M32	13-20	135
MVE 5000/3H-75A1	MVE 5000/36H-75A1	MVE 11500/2H-75A1																	T4	150	4G6	12-4c	135	M32	13-20	135
MVE 5000/3H-75C0	MVE 5000/36H-75C0	MVE 11500/2H-75C0	4.00	4.00	5.36	5.36	12.49	7.22	12.56	6.28		9.99	5.78	8.69	5.02	8.7	10.0		T4	150	4G6	12-4c	135	M32	13-20	135
MVE 5000/3H-75C1	MVE 5000/36H-75C1	MVE 11500/2H-75C1																	T4	150	4G6	12-4c	135	M32	13-20	135
							Winding 400 (Δ)				Winding 500 (Δ)															
							400V (Δ)	/	460V (Δ)	/	500V (Δ)	575V (Δ)														
							50Hz		60Hz		50Hz	60Hz														
MVE 6500/3H-85A0	MVE 6500/36H-85A0	MVE 14400/2H-85A0																	T4	150	4G6	12-4c	135	M32	13-20	135
MVE 6500/3H-85B0	MVE 6500/36H-85B0	MVE 14400/2H-85B0	5.23	5.50	7.01	7.38	9.43	/	8.20	/	7.54	6.56				8.7	9.0		T4	150	4G6	12-4c	135	M32	13-20	135
MVE 6500/3H-85C1	MVE 6500/36H-85C1	MVE 14400/2H-85C1																	T4	150	4G6	12-4c	135	M32	13-20	135
MVE 9000/3H-85A0	MVE 9000/36H-85A0	MVE 20100/2H-85A0																	T4	150	4G6	12-4c	135	M32	13-20	135
MVE 9000/3H-85B0	MVE 9000/36H-85B0	MVE 20100/2H-85B0	9.50	9.30	12.74	12.47	17.80	/	14.40	/	14.24	11.52				8.6	8.8		T4	150	4G6	12-4c	135	M32	13-20	135
MVE 9000/3H-85C1	MVE 9000/36H-85C1	MVE 20100/2H-85C1																	T4	150	4G6	12-4c	135	M32	13-20	135
MVE 6500/3H-86A0	MVE 6500/36H-86A0	MVE 14400/2H-86A0																	T4	150	4G6	12-4c	135	M32	13-20	135
MVE 6500/3H-86B0	MVE 6500/36H-86B0	MVE 14400/2H-86B0	5.50	6.30	7.38	8.45	9.50	/	9.50	/	7.60	7.60				8.2	7.7		T4	150	4G6	12-4c	135	M32	13-20	135
MVE 9000/3H-86A0	MVE 9000/36H-86A0	MVE 20100/2H-86A0																	T4	150	4G6	12-4c	135	M32	13-20	135
MVE 9000/3H-86B0	MVE 9000/36H-86B0	MVE 20100/2H-86B0	6.60	7.70	8.85	10.33	11.50	/	11.50	/	9.20	9.20				8.2	8.2		T4	150	4G6	12-4c	135	M32	13-20	135

(*) Certification level.
(**) Working moment = 2 x static moment.
(***) Custom footprint (available on request.

Dimension with coarse degree of accurancy related to UNI 22768/1
Rights reserved to modify technical specifications.

Type 50 Hz	Type 60 Hz	For U.S. Market	Electric Features																			
			power				Current		Capacitor			-20°C to 55°C			Cable Type			Cable gland			
			Kw		Hp		A max		uF			Classll Div.2	II 2D								
			50 hz	60 hz	50 hz	60 hz	230V 50/60Hz	115V 50/60Hz	220V 50Hz	220V 60Hz	115V 60Hz	Temp. Class T	Temp. Class (°C)	IEC type	U.S. Market Type: AWG (SOW)	Class temp. °C	IEC type	Clamp. cable Ø mm	Class temp. °C
MVH 60/3H-10A0	MVH 160/2H-10A0	MVH 160/2H-10A0	0.08	0.09	0.11	0.12	0.43	1.03	3	3	6.3	T4	115	4G1.5	18-4c	85	M16	5-10	85
MVH 100/3H-10A0	MVH 100/36H-10A0	MVH 220/2H-10A0	0.1	0.11	0.13	0.15	0.54	1.3	4	4	8	T4	115	4G1.5	18-4c	85	M16	5-10	85
MVH 200/3H-20A0	MVH 200/36H-20A0	MVH 440/2H-20A0	0.18	0.21	0.24	0.28	1.14	2.62	8	8	16	T4	115	4G2.5	16-4c	85	M20	7-13	85
MVH 200/3H-20AX	MVH 200/36H-20AX	MVH 440/2H-20AX										T4	115	4G2.5	16-4c	85	M20	7-13	85
MVH 200/3H-23A0	MVH 200/36H-23A0	MVH 440/2H-23A0	0.18	0.21	0.24	0.28	1.14	2.62	8	8	16	T4	115	4G2.5	16-4c	85	M20	7-13	85
												T4	115	4G2.5	16-4c	85	M20	7-13	85
												T4	115	4G2.5	16-4c	85	M20	7-13	85
MVH 300/3H-30A0	MVH 300/36H-30A0	MVH 690/2H-30A0	0.27	0.28	0.36	0.38	1.58	3.43	12.5	12.5	25.0	T4	115	4G2.5	16-4c	85	M20	7-13	85
												T4	115	4G2.5	16-4c	85	M20	7-13	85
MVH 300/3H-30AX	MVH 300/36H-30AX	MVH 690/2H-30AX										T4	115	4G2.5	16-4c	85	M20	7-13	85

(*) Certification level.
(**) Working moment = 2 x static moment.
(***) Working moment = 2 x static moment.

Dimension with coarse degree of accurancy related to UNI 22768/1
Rights reserved to modify technical specifications.

Type 50 Hz	Type 60 Hz	For U.S. Market	Electric Features																								
			power				Current (A max)										Ia/In		-20°C to 55°C		Cable Type			Cable gland			
			Kw		Hp		Winding 230/400				Winding 290/500								Class II Div.2	II 2D	IEC type	U.S. Market Type: AWG (SOW)	Class temp. °C	IEC type	Clamp. cable Ø	Class temp. °C
			50 hz	60 hz	50 hz	60 hz	230V (Δ)	400V (Y)	230V (Δ)	460V (Y)	290V (Δ)	500V (Y)	330V (Δ)	575V (Y)	50Hz	60Hz			Temp. Class	Temp. Class						
							50Hz		60Hz		50Hz		60Hz						T	(°C)					mm	
MVE 40/15H-10A0	MVE 40/18H- 10A0	MVE 70/4H-10A0	0.03	0.04	0.04	0.05	0.54	0.31	0.62	0.31	0.43	0.25	0.43	0.25	2.2	2.2	T4	115	4G1.5	18-4c	85	M16	5-10	85
MVE 90/15H-20A0	MVE 90/18H-20A0	MVE 200/4H-20A0	0.07	0.08	0.09	0.11	0.54	0.31	0.50	0.25	0.43	0.25	0.35	0.20	2.2	2.2	T4	115	4G2.5	16-4c	85	M20	7-13	85
MVE 90/15H-20AX	MVE 90/18H-20AX	MVE 200/4H-20AX															T4	115	4G2.5	16-4c	85	M20	7-13	85
MVE 90/15H-23A0	MVE 90/18H-23A0	MVE 200/4H-23A0	0.07	0.84	0.09	1.13	0.54	0.31	0.50	0.25	0.43	0.25	0.35	0.20	2.2	2.2	T4	115	4G2.5	16-4c	85	M20	7-13	85
																	T4	115	4G2.5	16-4c	85	M20	7-13	85
																	T4	115	4G2.5	16-4c	85	M20	7-13	85
MVE 200/15H-30A0	MVE 200/18H-30A0	MVE 400/4H-30A0	0.12	0.15	0.16	0.19	0.85	0.49	1.00	0.50	0.68	0.39	0.69	0.40	2.2	2.2	T4	115	4G2.5	16-4c	85	M20	7-13	85
																	T4	115	4G2.5	16-4c	85	M20	7-13	85
																	T4	115	4G2.5	16-4c	85	M20	7-13	85
MVE 200/15H-30AX	MVE 200/18H-30AX	MVE 400/4H-30AX															T4	115	4G2.5	16-4c	85	M20	7-13	85
MVE 400/15H-40A0	MVE 400/18H-40A0	MVE 860/4H-40A0	0.27	0.32	0.36	0.43	1.45	0.84	1.72	0.86	1.16	0.67	1.19	0.69	2.7	2.7	T4	150	4G2.5	16-4c	135	M20	7-13	135
MVE 400/15H-40AX	MVE 400/18H-40AX	MVE 860/4H-40AX															T4	150	4G2.5	16-4c	135	M20	7-13	135
MVE 500/15H-40A0	MVE 500/18H-40A0	MVE 1150/4H-40AX	0.35	0.40	0.47	0.54	1.83	1.06	2.18	1.09	1.47	0.85	1.51	0.87	3.0	2.9	T4	150	4G2.5	16-4c	135	M20	7-13	135
MVE 500/15H-40AX	MVE 500/18H-40AX	MVE 1150/4H-40AX															T4	150	4G2.5	16-4c	135	M20	7-13	135
MVE 300/15H-50A0	MVE 300/18H-50A0	MVE 750/4H-50A0	0.62	0.73	0.83	0.98	2.28	1.32	2.40	1.20	1.83	1.06	1.66	0.96	3.2	3.4	T4	150	4G2.5	16-4c	135	M20	7-13	135
MVE 300/15H-50C0	MVE 300/18H-50C0	MVE 750/4H-50C0															T4	150	4G2.5	16-4c	135	M20	7-13	135
MVE 300/15H-51A0	MVE 300/18H-51A0	MVE 750/4H-51A0															T4	150	4G2.5	16-4c	135	M20	7-13	135
MVE 700/15H-50A0	MVE 700/18H-50A0	MVE 1530/4H-50A0	0.62	0.73	0.83	0.98	2.28	1.32	2.40	1.20	1.83	1.06	1.66	0.96	3.2	3.4	T4	150	4G2.5	16-4c	135	M20	7-13	135
MVE 700/15H-50C0	MVE 700/18H-50C0	MVE 1530/4H-50C0															T4	150	4G2.5	16-4c	135	M20	7-13	135
MVE 710/15H-50A0	MVE 710/18H-50A0	MVE 1540/4H-50A0	0.62	0.73	0.83	0.98	2.28	1.32	2.40	1.20	1.83	1.06	1.66	0.96	3.2	3.4	T4	150	4G2.5	16-4c	135	M20	7-13	135
MVE 710/15H-50C0	MVE 710/18H-50C0	MVE 1540/4H-50C0															T4	150	4G2.5	16-4c	135	M20	7-13	135
MVE 950/15H-50A0	MVE 950/18H-50A0	MVE 2100/4H-50A0	0.64	0.77	0.86	1.03	2.42	1.40	2.70	1.35	1.94	1.12	1.87	1.08	4.2	4.2	T4	150	4G2.5	16-4c	135	M20	7-13	135
MVE 950/15H-50C0	MVE 950/18H-50C0	MVE 2100/4H-50C0															T4	150	4G2.5	16-4c	135	M20	7-13	135
MVE 1100/15H-50A0	MVE 1100/18H-50A0	MVE 2300/4H-50A0	0.64	0.77	0.86	1.03	2.42	1.40	2.70	1.35	1.94	1.12	1.87	1.08	4.0	4.0	T4	150	4G2.5	16-4c	135	M20	7-13	135
MVE 1100/15H-50C0	MVE 1100/18H-50C0	MVE 2300/4H-50C0															T4	150	4G2.5	16-4c	135	M20	7-13	135
MVE 1100/15H-51A0	MVE 1100/18H-51A0	MVE 2300/4H-51A0															T4	150	4G2.5	16-4c	135	M20	7-13	135
MVE 1400/15H-60A0	MVE 1400/18H-60A0	MVE 3100/4H-60A0	0.70	0.84	0.94	1.13	3.08	1.78	3.56	1.78	2.46	1.42	2.46	1.42	4.2	4.2	T4	150	4G4	14-4c	135	M25	10-16	135
MVE 1400/15H-60C0	MVE 1400/18H-60C0	MVE 3100/4H-60C0															T4	150	4G4	14-4c	135	M25	10-16	135
MVE 1700/15H-60A0	MVE 1700/18H-60A0	MVE 3880/4H-60A0	1.13	1.30	1.52	1.74	3.74	2.16	4.18	2.09	2.99	1.73	2.89	1.67	4.9	4.7	T4	150	4G4	14-4c	135	M25	10-16	135
MVE 1700/15H-60C0	MVE 1700/18H-60C0	MVE 3880/4H-60C0															T4	150	4G4	14-4c	135	M25	10-16	135
MVE 2400/15H-60A0	MVE 2400/18H-60A0	MVE 5340/4H-60A0	1.57	1.88	2.11	2.53	5.54	3.20	6.40	3.20	4.43	2.56	4.43	2.56	5.1	5.1	T4	150	4G4	14-4c	135	M25	10-16	135
MVE 2400/15H-60C0	MVE 2400/18H-60C0	MVE 5340/4H-60C0															T4	150	4G4	14-4c	135	M25	10-16	135
MVE 2500/15H-70A0	MVE 2500/18H-70A0	MVE 5700/4H-70A0	1.76	2.00	2.36	2.68	5.33	3.08	6.00	3.00	4.26	2.46	4.15	2.40	6.2	6.3	T4	150	4G4	14-4c	135	M25	10-16	135
MVE 2500/15H-70B0	MVE 2500/18H-70B0	MVE 5700/4H-70B0															T4	150	4G4	14-4c	135	M25	10-16	135
MVE 2500/15H-70C0	MVE 2500/18H-70C0	MVE 5700/4H-70C0															T4	150	4G4	14-4c	135	M25	10-16	135
MVE 3000/15H-70A0	MVE 3000/18H-70A0	MVE 6840/4H-70A0	1.90	2.30	2.55	3.08	6.37	3.68	6.60	3.30	5.09	2.94	4.57	2.64	6.7	6.8	T4	150	4G4	14-4c	135	M25	10-16	135
MVE 3000/15H-70B0	MVE 3000/18H-70B0	MVE 6840/4H-70B0															T4	150	4G4	14-4c	135	M25	10-16	135
MVE 3000/15H-70C0	MVE 3000/18H-70C0	MVE 6840/4H-70C0															T4	150	4G4	14-4c	135	M25	10-16	135

(*) Certification level.
(**) Working moment = 2 x static moment.
(***) Custom footprint (available on request.

Dimension with coarse degree of accurancy related to UNI 22768/1
Rights reserved to modify technical specifications.

Type 50 Hz	Type 60 Hz	For U.S. Market	Electric Features																								
			power				Current (A max)								Ia/In		-20°C to 55°C		Cable Type			Cable gland					
			Kw		Hp		Winding 230/400					Winding 290/500					ClassII Div.2	II 2D	IEC type	U.S. Market	Class temp. °C	IEC type	Clamp. cable Ø	Class temp. °C			
			50 hz	60 hz	50 hz	60 hz	230V (Δ)	400V (Y)	230V (Δ)	460V (Y)		290V (Δ)	500V (Y)	330V (Δ)	575V (Y)	50Hz	60Hz	Temp. Class	Temp. Class		Type: AWG (SOW)			mm				
							50Hz		60Hz			50Hz		60Hz				T	(°C)									
MVE 3800/15H-75A0	MVE 3800/18H-75A0	MVE 8400/4H-75A0	2.20	2.60	2.95	3.49	7.18	4.15	8.30	4.15		5.74	3.32	5.74	3.32	7.0	7.0	T4	150	4G6	12-4c	135	M32	13-20	135			
MVE 3800/15H-75C0	MVE 3800/18H-75C0	MVE 8400/4H-75C0																T4	150	4G6	12-4c	135	M32	13-20	135			
MVE 3800/15H-75C1	MVE 3800/18H-75C1	MVE 8400/4H-75C1																T4	150	4G6	12-4c	135	M32	13-20	135			
MVE 4300/15H-75A0	MVE 4300/18H-75A0	MVE 9480/4H-75A0	2.50	3.00	3.35	4.02	7.79	4.50	9.20	4.60		6.23	3.60	6.37	3.68	7.2	7.4	T4	150	4G6	12-4c	135	M32	13-20	135			
MVE 4300/15H-75C0	MVE 4300/18H-75C0	MVE 9480/4H-75C0																T4	150	4G6	12-4c	135	M32	13-20	135			
MVE 4300/15H-75C1	MVE 4300/18H-75C1	MVE 9480/4H-75C1																T4	150	4G6	12-4c	135	M32	13-20	135			
MVE 3800/15H-80C0	MVE 3800/18H-80C0	MVE 12260/4H-80C0	3.00	3.50	4.02	4.69	10.38	6.00	12.00	6.00		8.30	4.80	8.30	4.80	7.2	6.5	T4	150	4G6	12-4c	135	M32	13-20	135			
MVE 5400/15H-80C0	MVE 5400/18H-80C0	MVE 11880/4H-80C0	3.00	3.50	4.02	4.69	10.38	6.00	12.00	6.00		8.30	4.80	8.30	4.80	7.2	6.5	T4	150	4G6	12-4c	135	M32	13-20	135			
MVE 5500/15H-80A0	MVE 5500/18H-80A0	MVE 12260/4H-80A0	2.88	3.45	3.86	4.63	11.25	6.50	11.00	5.50		9.00	5.20	7.61	4.40	7.3	7.2	T4	150	4G6	12-4c	135	M32	13-20	135			
							Winding 400 (Δ)				Winding 500																	
							400V (Δ)	/	460V (Δ)	/	500V (Δ)	575V (Δ)																
							50Hz		60Hz		50Hz	60Hz																
MVE 7200/15H-85A0	MVE 7200/18H-85A0	MVE 15850/4H-85A0	4.00	4.80	5.36	6.44	8.50	/	8.70	/	6.80	6.96				7.00	7.10	T4	150	4G6	12-4c	135	M32	13-20	135			
MVE 7200/15H-85B0	MVE 7200/18H-85B0	MVE 15850/4H-85B0																T4	150	4G6	12-4c	135	M32	13-20	135			
MVE 7200/15H-85C1	MVE 7200/18H-85C1	MVE 15850/4H-85C1																T4	150	4G6	12-4c	135	M32	13-20	135			
MVE 9000/15H-85A0	MVE 9000/18H-85A0	MVE 19800/4H-85A0	7.35	8.50	9.86	11.40	13.40	/	12.00	/	10.72	9.60				7.20	7.20	T4	150	4G6	12-4c	135	M32	13-20	135			
MVE 9000/15H-85B0	MVE 9000/18H-85B0	MVE 19800/4H-85B0																T4	150	4G6	12-4c	135	M32	13-20	135			
MVE 9000/15H-85C1	MVE 9000/18H-85C1	MVE 19800/4H-85C1																T4	150	4G6	12-4c	135	M32	13-20	135			
MVE 7200/15H-86A0	MVE 7200/18H-86A0	MVE 15850/4H-86A0	6.00	6.50	8.05	8.72	11.00	/	10.80	/	8.80	8.64				4.70	4.50	T4	150	4G6	12-4c	135	M32	13-20	135			
MVE 7200/15H-86B0	MVE 7200/18H-86B0	MVE 15850/4H-86B0																T4	150	4G6	12-4c	135	M32	13-20	135			
MVE 7200/15H-86C0	MVE 7200/18H-86C0	MVE 15850/4H-86C0	6.00	6.50	8.05	8.72	11.00	/	10.80	/	8.80	8.64				4.70	4.50	T4	150	4G6	12-4c	135	M32	13-20	135			
MVE 7200/15H-86C1	MVE 7200/18H-86C1	MVE 15850/4H-86C1																T4	150	4G6	12-4c	135	M32	13-20	135			
MVE 9000/15H-86A0	MVE 9000/18H-86A0	MVE 19800/4H-86A0	6.00	6.50	8.05	8.72	11.00	/	10.80	/	8.80	8.64				4.70	4.50	T4	150	4G6	12-4c	135	M32	13-20	135			
MVE 9000/15H-86B0	MVE 9000/18H-86B0	MVE 19800/4H-86B0																T4	150	4G6	12-4c	135	M32	13-20	135			
MVE 9000/15H-86C0	MVE 9000/18H-86C0	MVE 19800/4H-86C0	6.00	6.50	8.05	8.72	11.00	/	10.80	/	8.80	8.64				4.70	4.50	T4	150	4G6	12-4c	135	M32	13-20	135			
MVE 9000/15H-86C1	MVE 9000/18H-86C1	MVE 19800/4H-86C1																T4	150	4G6	12-4c	135	M32	13-20	135			
MVE 10000/15H-90A0	MVE 10000/18H-90A0	MVE 21000/4H-90A0	5.40	7.00	7.24	9.39	13.00	/	13.00	/	10.40	10.40				6.70	6.60	T4	150	4G6	12-4c	135	M32	13-20	135			
MVE 10000/15H-90B0	MVE 10000/18H-90B0	MVE 21000/4H-90B0																T4	150	4G6	12-4c	135	M32	13-20	135			
MVE 10000/15H-91A0	MVE 10000/18H-91A0	MVE 21000/4H-91A0	7.00	8.20	9.39	11.00	13.10	/	13.10	/	10.48	10.48				7.20	7.70	T4	150	4G6	12-4c	135	M32	13-20	135			
MVE 10000/15H-91B0	MVE 10000/18H-91B0	MVE 21000/4H-91B0																T4	150	4G6	12-4c	135	M32	13-20	135			

(*) Certification level.
(**) Working moment = 2 x static moment.
(***) Working moment = 2 x static moment.

Dimension with coarse degree of accurancy related to UNI 22768/1
Rights reserved to modify technical specifications.

Type 50 Hz	Type 60 Hz	For U.S. Market	Electric Features																							
			power				Current (A max)										Ia/In		-20°C to +55°C		Cable Type			Cable gland		
			Kw		Hp		Winding 230/400					Winding 290/500							ClassII Div.2	II 2D	IEC type	U.S. Market Type: AWG (SOW)	Class temp. °C	IEC type	Clamp. cable Ø	Class temp. °C
			50 hz	60 hz	50 hz	60 hz	230V (Δ)	400V (Y)	230V (Δ)	460V (Y)		290V (Δ)	500V (Y)	330V (Δ)	575V (Y)		50Hz	60Hz	Temp. Class	Temp. Class					mm	
							50Hz		60Hz			50Hz		60Hz					T	(°C)						
MVE 50/1H-30A0	MVE 50/12H-30A0	MVE 90/6H-30A0	0.12	0.14	0.16	0.19	0.52	0.30	0.80	0.40		0.42	0.24	0.55	0.32		2.20	2.20	T4	115	4G2.5	16-4c	85	M20	7-13	85
MVE 50/1H-30AX	MVE 50/12H-30AX	MVE 90/6H-30AX																	T4	115	4G2.5	16-4c	85	M20	7-13	85
MVE 100/1H-30A0	MVE 100/12H-30A0	MVE 220/6H-30A0	0.12	0.14	0.16	0.19	0.52	0.30	0.80	0.40		0.42	0.24	0.55	0.32		2.20	2.20	T4	115	4G2.5	16-4c	85	M20	7-13	85
MVE 100/1H-30AX	MVE 100/12H-30AX	MVE 220/6H-30AX																	T4	115	4G2.5	16-4c	85	M20	7-13	85
MVE 200/1H-40A0	MVE 200/12H-40A0	MVE 410/6H-40A0	0.15	0.18	0.20	0.24	1.12	0.65	1.25	0.63		0.90	0.52	0.87	0.50		2.20	2.20	T4	150	4G2.5	16-4c	135	M20	7-13	135
MVE 200/1H-40AX	MVE 200/12H-40AX	MVE 410/6H-40AX																	T4	150	4G2.5	16-4c	135	M20	7-13	135
MVE 300/1H-50A0	MVE 300/12H-50A0	MVE 680/6H-50A0	0.25	0.30	0.34	0.40	1.16	0.67	1.28	0.64		0.93	0.54	0.89	0.51		2.70	2.70	T4	150	4G2.5	16-4c	135	M20	7-13	135
MVE 300/1H-50C0	MVE 300/12H-50C0	MVE 680/6H-50C0																	T4	150	4G2.5	16-4c	135	M20	7-13	135
MVE 500/1H-50A0	MVE 500/12H-50A0	MVE 1100/6H-50A0	0.35	0.40	0.47	0.54	2.11	1.22	2.30	1.15		1.69	0.98	1.59	0.92		3.00	2.90	T4	150	4G2.5	16-4c	135	M20	7-13	135
MVE 500/1H-50C0	MVE 500/12H-50C0	MVE 1100/6H-50C0																	T4	150	4G2.5	16-4c	135	M20	7-13	135
MVE 510/1H-50A0	MVE 510/12H-50A0	MVE 1600/6H-50A0	0.35	0.40	0.47	0.54	2.08	1.20	2.30	1.15		1.66	0.96	1.59	0.92		3.00	2.90	T4	150	4G2.5	16-4c	135	M20	7-13	135
MVE 510/1H-50C0	MVE 510/12H-50C0	MVE 1600/6H-50C0																	T4	150	4G2.5	16-4c	135	M20	7-13	135
MVE 800/1H-60A0	MVE 800/12H-60A0	MVE 1730/6H-60A0	0.75	0.80	1.01	1.07	2.46	1.42	2.64	1.32		1.97	1.14	1.83	1.06		3.40	3.30	T4	150	4G4	14-4c	135	M25	10-16	135
MVE 800/1H-60C0	MVE 800/12H-60C0	MVE 1730/6H-60C0																	T4	150	4G4	14-4c	135	M25	10-16	135
MVE 1100/1H-60A0	MVE 1100/12H-60A0	MVE 2350/6H-60A0	0.75	0.80	1.01	1.07	2.46	1.42	2.64	1.32		1.97	1.14	1.83	1.06		3.40	3.30	T4	150	4G4	14-4c	135	M25	10-16	135
MVE 1100/1H-60C0	MVE 1100/12H-60C0	MVE 2350/6H-60C0																	T4	150	4G4	14-4c	135	M25	10-16	135
MVE 1500/1H-60A0	MVE 1500/12H-60A0	MVE 3090/6H-60A0	0.90	1.08	1.21	1.45	3.11	1.80	4.00	2.00		2.49	1.44	2.77	1.60		3.50	3.50	T4	150	4G4	14-4c	135	M25	10-16	135
MVE 1500/1H-60C0	MVE 1500/12H-60C0	MVE 3090/6H-60C0																	T4	150	4G4	14-4c	135	M25	10-16	135
MVE 1600/1H-70A0	MVE 1600/12H-70A0	MVE 3580/6H-70A0	0.90	1.08	1.21	1.45	4.15	2.40	4.60	2.30		3.32	1.92	3.18	1.84		3.90	3.80	T4	150	4G4	14-4c	135	M25	10-16	135
MVE 1600/1H-70B0	MVE 1600/12H-70B0	MVE 3580/6H-70B0																	T4	150	4G4	14-4c	135	M25	10-16	135
MVE 1600/1H-70C0	MVE 1600/12H-70C0	MVE 3580/6H-70C0																	T4	150	4G4	14-4c	135	M25	10-16	135
MVE 2100/1H-70A0	MVE 2100/12H-70A0	MVE 4740/6H-70A0	1.50	1.80	2.01	2.41	5.19	3.00	6.40	3.20		4.15	2.40	4.43	2.56		4.50	4.60	T4	150	4G4	14-4c	135	M25	10-16	135
MVE 2100/1H-70B0	MVE 2100/12H-70B0	MVE 4740/6H-70B0																	T4	150	4G4	14-4c	135	M25	10-16	135
MVE 2100/1H-70C0	MVE 2100/12H-70C0	MVE 4740/6H-70C0																	T4	150	4G4	14-4c	135	M25	10-16	135
MVE 2200/1H-70A0	MVE 2200/12H-70A0	MVE 4850/6H-70A0	1.50	1.80	2.01	2.41	5.19	3.00	6.40	3.20		4.15	2.40	4.43	2.56		4.50	4.60	T4	150	4G4	14-4c	135	M25	10-16	135
MVE 2200/1H-70B0	MVE 2200/12H-70B0	MVE 4850/6H-70B0																	T4	150	4G4	14-4c	135	M25	10-16	135
MVE 2200/1H-70C0	MVE 2200/12H-70C0	MVE 4850/6H-70C0																	T4	150	4G4	14-4c	135	M25	10-16	135
MVE 2600/1H-75A0	MVE 2600/12H-75A0	MVE 5690/6H-75A0	1.96	2.10	2.63	2.82	7.09	4.10	8.00	4.00		5.67	3.28	5.54	3.20		5.00	5.00	T4	150	4G6	12-4c	135	M32	13-20	135
MVE 2600/1H-75C0	MVE 2600/12H-75C0	MVE 5690/6H-75C0																	T4	150	4G6	12-4c	135	M32	13-20	135
MVE 2600/1H-75C1	MVE 2600/12H-75C1	MVE 5690/6H-75C1																	T4	150	4G6	12-4c	135	M32	13-20	135
MVE 3000/1H-75A0	MVE 3000/12H-75A0	MVE 6620/6H-75A0	2.20	2.40	2.95	3.22	7.79	4.50	8.60	4.30		6.23	3.60	5.95	3.44		5.20	5.20	T4	150	4G6	12-4c	135	M32	13-20	135
MVE 3000/1H-75C0	MVE 3000/12H-75C0	MVE 6620/6H-75C0																	T4	150	4G6	12-4c	135	M32	13-20	135
MVE 3000/1H-75C1	MVE 3000/12H-75C1	MVE 6620/6H-75C1																	T4	150	4G6	12-4c	135	M32	13-20	135
MVE 3700/1H-75A0	MVE 3700/12H-75A0	MVE 8160/6H-75A0	2.20	2.40	2.95	3.22	7.79	4.50	8.60	4.30		6.23	3.60	5.95	3.44		5.20	5.20	T4	150	4G6	12-4c	135	M32	13-20	135
MVE 3700/1H-75C0	MVE 3700/12H-75C0	MVE 8160/6H-75C0																	T4	150	4G6	12-4c	135	M32	13-20	135
MVE 3700/1H-75C1	MVE 3700/12H-75C1	MVE 8160/6H-75C1																	T4	150	4G6	12-4c	135	M32	13-20	135
MVE 4700/1H-80C0	MVE 4700/12H-80C0	MVE 10380/6H-80C0	3.20	3.90	4.29	5.23	11.25	6.50	13.90	6.95		9.00	5.20	9.62	5.56		5.70	5.90	T4	150	4G6	12-4c	135	M32	13-20	135
MVE 5200/1H-80C0	MVE 5200/12H-80C0	MVE 11500/6H-80C0	3.80	4.00	5.10	5.36	11.97	6.92	12.72	6.36		9.58	5.54	8.80	5.09		5.70	5.70	T4	150	4G6	12-4c	135	M32	13-20	135
MVE 3800/1H-80A0	MVE 3800/12H-80A0	MVE 8450/6H-80A0	2.50	3.00	3.35	4.02	9.52	5.50	10.60	5.30		7.61	4.40	7.34	4.24		6.10	6.20	T4	150	4G6	12-4c	135	M32	13-20	135
MVE 3800/1H-80C0	MVE 3800/12H-80C0	MVE 8450/6H-80C0	2.50	3.00	3.35	4.02	9.52	5.50	10.60	5.30		7.61	4.40	7.34	4.24		0.20	0.20	T4	150	4G6	12-4c	135	M32	13-20	135

(*) Certification level.
(**) Working moment = 2 x static moment.
(***) Custom footprint (available on request.

Dimension with coarse degree of accurancy related to UNI 22768/1
Rights reserved to modify technical specifications.

Type 50 Hz	Type 60 Hz	For U.S. Market	Electric Features																							
			power				Current (A max)										Ia/In		-20°C to +55°C		Cable Type			Cable gland		
			Kw		Hp		Winding 230/400					Winding 290/500							ClassII Div.2	II 2D	IEC type	U.S. Market Type: AWG (SQW)	Class temp. °C	IEC type	Clamp. cable Ø	Class temp. °C
			50 hz	60 hz	50 hz	60 hz	230V (Δ)	400V (Y)	230V (Δ)	460V (Y)		290V (Δ)	500V (Y)	330V (Δ)	575V (Y)		50Hz	60Hz	Temp. Class	Temp. Class					mm	
							50Hz		60Hz			50Hz		60Hz					T	(°C)						
MVE 4700/1H-80A0	MVE 4700/12H-80A0	MVE 10370/6H-80A0	3.20	3.90	4.29	5.23	11.25	6.50	13.90	6.95		9.00	5.20	9.62	5.56		5.70	5.90	T4	150	4G6	12-4c	135	M32	13-20	135
MVE 5200/1H-85A0	MVE 5200/12H-85A0	MVE 11500/6H-85A0																	T4	150	4G6	12-4c	135	M32	13-20	135
MVE 5200/1H-85B0	MVE 5200/12H-85B0	MVE 11500/6H-85B0	3.80	4.00	5.10	5.36	11.97	6.92	12.72	6.36		9.58	5.54	8.80	5.09		5.70	5.70	T4	150	4G6	12-4c	135	M32	13-20	135
MVE 5200/1H-85C1	MVE 5200/12H-85C1	MVE 11500/6H-85C1																	T4	150	4G6	12-4c	135	M32	13-20	135
MVE 6500/1H-85A0	MVE 6500/12H-85A0	MVE 14360/6H-85A0																	T4	150	4G6	12-4c	135	M32	13-20	135
MVE 6500/1H-85B0	MVE 6500/12H-85B0	MVE 14360/6H-85B0	4.30	5.00	5.77	6.71	13.42	7.76	15.62	7.81		10.74	6.21	10.81	6.25		6.40	6.20	T4	150	4G6	12-4c	135	M32	13-20	135
MVE 6500/1H-85C1	MVE 6500/12H-85C1	MVE 14360/6H-85C1																	T4	150	4G6	12-4c	135	M32	13-20	135
MVE 6500/1H-86C0	MVE 6500/12H-86C0	MVE 14360/6H-86C0	4.60	5.50	6.17	7.38	15.57	9.00	20	10.00		12.46	7.20	13.84	8.00		6	6.20	T4	135	4G6	12-4c	120	M32	13-20	120
MVE 7200/1H-86C0	MVE 7200/12H-86C0	MVE 15800/6H-86C0	4.60	5.50	6.17	7.38	15.57	9.00	20	10.00		12.46	7.20	13.84	8.00		6	6.20	T4	135	4G6	12-4c	120	M32	13-20	120
							Winding 400 (Δ)				Winding 500															
							400V (Δ)	/	460V (Δ)	/	500V (Δ)	575V (Δ)														
							50Hz		60Hz		50Hz	60Hz														
MVE 8000/1H-85A0	MVE 8000/12H-85A0	MVE 17750/6H-85A0																	T4	150	4G6	12-4c	135	M32	13-20	135
MVE 8000/1H-85B0	MVE 8000/12H-85B0	MVE 17750/6H-85B0	5.50	6.60	7.38	8.85	12.60	/	11.60	/	10.08	9.28					6.20	6.40	T4	150	4G6	12-4c	135	M32	13-20	135
MVE 8000/1H-85C1	MVE 8000/12H-85C1	MVE 17750/6H-85C1																	T4	150	4G6	12-4c	135	M32	13-20	135
MVE 9000/1H-85A0	MVE 9000/12H-85A0	MVE 19120/6H-85A0																	T4	150	4G6	12-4c	135	M32	13-20	135
MVE 9000/1H-85B0	MVE 9000/12H-85B0	MVE 19120/6H-85B0	6.20	7.45	8.31	9.99	13.20	/	12.60	/	10.56	10.08					6.50	6.40	T4	150	4G6	12-4c	135	M32	13-20	135
MVE 9000/1H-85C1	MVE 9000/12H-85C1	MVE 19120/6H-85C1																	T4	150	4G6	12-4c	135	M32	13-20	135
MVE 8000/1H-86A0	MVE 8000/12H-86A0	MVE 17750/6H-86A0	4.60	5.50	6.17	7.38	9.00	/	10.00	/	7.20	8.00					6.00	6.20	T4	150	4G6	12-4c	135	M32	13-20	135
MVE 8000/1H-86B0	MVE 8000/12H-86B0	MVE 17750/6H-86B0			0.00	0.00													T4	150	4G6	12-4c	135	M32	13-20	135
MVE 9000/1H-86A0	MVE 9000/12H-86A0	MVE 19120/6H-86A0	4.60	5.50	6.17	7.38	9.00	/	10.00	/	7.20	8.00					6.00	6.20	T4	150	4G6	12-4c	135	M32	13-20	135
MVE 9000/1H-86B0	MVE 9000/12H-86B0	MVE 19120/6H-86B0																	T4	150	4G6	12-4c	135	M32	13-20	135
MVE 9800/1H-86C1	MVE 9800/12H-86C1	MVE 21600/6H-86C1	4.60	5.50	6.17	7.38	9.00	/	10.00	/	7.20	8.00					6.00	6.20	T4	150	4G6	12-4c	135	M32	13-20	135
MVE 11200/1H-86C1	MVE 11200/12H-86C1	MVE 24700/6H-86C1	5.20	6.10	6.97	8.18	10.00	/	10.00	/	8.00	8.00					6.70	7.20	T4	150	4G6	12-4c	135	M32	13-20	135
MVE 8000/1H-86C0	MVE 8000/12H-86C0	MVE 17750/6H-86C0	4.60	5.50	6.17	7.38	9.00	/	10.00	/	7.20	8.00					5.90	6.20	T4	150	4G6	12-4c	135	M32	13-20	135
MVE 9000/1H-86C0	MVE 9000/12H-86C0	MVE 19120/6H-86C0	4.60	5.50	6.17	7.38	9.00	/	10.00	/	7.20	8.00					5.90	6.20	T4	150	4G6	12-4c	135	M32	13-20	135
MVE 10000/1H-90A0	MVE 10000/12H-90A0	MVE 21400/6H-90A0	6.10	6.40	8.18	8.58	14.00	/	12.70	/	11.20	10.16					6.60	6.60	T4	150	4G6	12-4c	135	M32	13-20	135
MVE 10000/1H-90B0	MVE 10000/12H-90B0	MVE 21400/6H-90B0																	T4	150	4G6	12-4c	135	M32	13-20	135
MVE 13000/1H-90A0	MVE 13000/12H-90A0	MVE 28660/6H-90A0	7.50	8.30	10.06	11.13	16.40	/	16.00	/	13.12	12.80					6.40	6.50	T4	150	4G6	12-4c	135	M32	13-20	135
MVE 13000/1H-90B0	MVE 13000/12H-90B0	MVE 28660/6H-90B0																	T4	150	4G6	12-4c	135	M32	13-20	135
MVE 10000/1H-91A0	MVE 10000/12H-91A0	MVE 21400/6H-91A0	6.40	7.70	8.58	10.33	13.00	/	14.50	/	10.40	11.60					6.00	6.00	T4	150	4G6	12-4c	135	M32	13-20	135
MVE 10000/1H-91B0	MVE 10000/12H-91B0	MVE 21400/6H-91B0																	T4	150	4G6	12-4c	135	M32	13-20	135
MVE 11400/1H-91A0	MVE 11400/12H-91A0	MVE 25100/6H-91A0	6.40	7.70	8.58	10.33	13.00	/	14.5	/	10.40	6.00					6.00	T4	150	4G6	12-4c	135	M32	13-20	135	
MVE 11400/1H-91B0	MVE 11400/12H-91B0	MVE 25100/6H-91B0																0.20	T4	150	4G6	12-4c	135	M32	13-20	135
MVE 13000/1H-91A0	MVE 13000/12H-91A0	MVE 28660/6H-91A0	8.00	8.90	10.73	11.94	17.20	/	18.10	/	13.76	14.48					5.60	6.30	T4	150	4G6	12-4c	135	M32	13-20	135
MVE 13000/1H-91B0	MVE 13000/12H-91B0	MVE 28660/6H-91B0															0.20	0.20	T4	150	4G6	12-4c	135	M32	13-20	135

(*) Certification level.
(**) Working moment = 2 x static moment.
(***) Working moment = 2 x static moment.

Dimension with coarse degree of accurancy related to UNI 22768/1
Rights reserved to modify technical specifications.

Type 50 Hz	Type 60 Hz	For U.S. Market	Electric Feaures																								
			power				Current (A max)								Power Factor		Ia/In		-20°C to +55°C		Cable Type				Cable gland		
			Kw		Hp		Winding 230/400					Winding 290/500							ClassII Div.2	II 2D	IEC type	U.S. Market Type: AWG (SOW)	Class temp. °C	IEC type	Clamp. cable Ø		Class temp. °C
			50 hz	60 hz	50 hz	60 hz	230V (Δ)	400V (Y)	230V (Δ)	460V (Y)		290V (Δ)	500V (Y)	330V (Δ)	575V (Y)	50Hz	60Hz	50Hz	60Hz	Temp. Class	Temp. Class (°C)					mm	
							50Hz		60Hz			50Hz		60Hz					T							
MVE 150/075H-40A0	MVE 150/090H-40A0	MVE 330/8H-40A	0.23	0.25	0.31	0.34	1.97	1.14	2.28	1.14		1.58	0.91	1.58	0.91	0.29	0.37	1.7	1.7	T4	150	4G2.5	16-4c	135	M20	7-13	135
MVE 150/075H-40AX	MVE 150/090H-40AX	MVE 330/8H-40AX																		T4	150	4G2.5	16-4c	135	M20	7-13	135
MVE 250/075H-50A0	MVE 250/090H-50A0	MVE 550/8H-50A	0.25	0.30	0.34	0.40	1.56	0.90	1.78	0.89		1.25	0.72	1.23	0.71	0.41	0.45	1.9	1.9	T4	150	4G2.5	16-4c	135	M20	7-13	135
MVE 250/075H-50C0	MVE 250/090H-50C0	MVE 550/8H-50C0																		T4	150	4G2.5	16-4c	135	M20	7-13	135
MVE 400/075H-50A0	MVE 400/090H-50A0	MVE 880/8H-50A0	0.25	0.30	0.34	0.40	1.56	0.90	1.78	0.89		1.25	0.72	1.23	0.71	0.41	0.45	2.1	2.1	T4	150	4G2.5	16-4c	135	M20	7-13	135
MVE 400/075H-50C0	MVE 400/090H-50C0	MVE 880/8H-50C0																		T4	150	4G2.5	16-4c	135	M20	7-13	135
MVE 650/075H-60A0	MVE 650/090H-60A0	MVE 1430/8H-60A0	0.37	0.45	0.50	0.60	2.08	1.20	2.40	1.20		1.66	0.96	1.66	0.96	0.56	0.62	2.4	2.4	T4	150	4G4	14-4c	135	M25	10-16	135
MVE 650/075H-60C0	MVE 650/090H-60C0	MVE 1430/8H-60C0																		T4	150	4G4	14-4c	135	M25	10-16	135
MVE 900/075H-60A0	MVE 900/090H-60A0	MVE 2000/8H-60A0	0.45	0.54	0.60	0.72	2.13	1.23	2.58	1.29		1.70	0.98	1.79	1.03	0.57	0.62	2.7	2.7	T4	150	4G4	14-4c	135	M25	10-16	135
MVE 900/075H-60C0	MVE 900/090H-60C0	MVE 2000/8H-60C0																		T4	150	4G4	14-4c	135	M25	10-16	135
MVE 1300/075H-70A0	MVE 1300/090H-70A0	MVE 2900/8H-70A0	0.75	0.90	1.01	1.21	3.81	2.20	4.40	2.20		3.04	1.76	3.04	1.76	0.69	0.72	3.2	3.2	T4	150	4G4	14-4c	135	M25	10-16	135
MVE 1300/075H-70B0	MVE 1300/090H-70B0	MVE 2900/8H-70B0																		T4	150	4G4	14-4c	135	M25	10-16	135
MVE 1300/075H-70C0	MVE 1300/090H-70C0	MVE 2900/8H-70C0																		T4	150	4G4	14-4c	135	M25	10-16	135
MVE 2100/075H-75A0	MVE 2100/090H-75A0	MVE 4620/8H-75A0	1.00	1.20	1.34	1.61	4.86	2.81	5.78	2.89		3.89	2.25	4.00	2.31	0.64	0.65	4.4	4.3	T4	150	4G6	12-4c	135	M32	13-20	135
MVE 2100/075H-75C0	MVE 2100/090H-75C0	MVE 4620/8H-75C0																		T4	150	4G6	12-4c	135	M32	13-20	135
MVE 2100/075H-75C1	MVE 2100/090H-75C1	MVE 4620/8H-75C1																		T4	150	4G6	12-4c	135	M32	13-20	135
MVE 3100/075H-80A0	MVE 3100/090H-80A0	MVE 6820/8H-80A0	2.00	2.30	2.68	3.08	7.79	4.50	8.80	4.40		6.23	3.60	6.09	3.52	0.68	0.73	4.2	4.2	T4	150	4G6	12-4c	135	M32	13-20	135
MVE 3800/075H-80A0	MVE 3800/090H-80A0	MVE 8360/8H-80A0	2.50	3.00	3.35	4.02	10.38	6.00	12.00	6.00		8.30	4.80	8.30	4.80	0.66	0.67	4.1	4.2	T4	150	4G6	12-4c	135	M32	13-20	135
MVE 3800/075H-80C0	MVE 3800/090H-80C0	MVE 8360/8H-80C0																		T4	150	4G6	12-4c	135	M32	13-20	135
MVE 4200/075H-80C0	MVE 4200/090H-80C0	MVE 9240/8H-80C0	2.90	3.40	3.89	4.56	12.37	7.15	13.00	6.50		9.90	5.72	9.00	5.20	0.69	0.71	4.0	3.9	T4	150	4G6	12-4c	135	M32	13-20	135
MVE 5300/075H-80C0	MVE 5300/090H-80C0	MVE 11660/8H-80C0	3.70	4.30	4.96	5.77	13.84	8.00	16.40	8.20		11.07	6.40	11.35	6.56	0.66	0.67	4.0	4.2	T4	150	4G6	12-4c	135	M32	13-20	135
MVE 4200/075H-85A0	MVE 4200/090H-85A0	MVE 9240/8H-85A0	2.90	3.40	3.89	4.56	11.25	6.50	13.00	6.50		9.00	5.20	9.00	5.20	0.69	0.71	4.0	3.9	T4	150	4G6	12-4c	135	M32	13-20	135
MVE 4200/075H-85B0	MVE 4200/090H-85B0	MVE 9240/8H-85B0																		T4	150	4G6	12-4c	135	M32	13-20	135
MVE 4200/075H-85C1	MVE 4200/090H-85C1	MVE 9240/8H-85C1																		T4	150	4G6	12-4c	135	M32	13-20	135
MVE 5300/075H-85A0	MVE 5300/090H-85A0	MVE 11660/8H-85A0	3.70	4.30	4.96	5.77	13.84	8.00	16.40	8.20		11.07	6.40	11.35	6.56	0.72	0.76	4.0	4.4	T4	150	4G6	12-4c	135	M32	13-20	135
MVE 5300/075H-85B0	MVE 5300/090H-85B0	MVE 11660/8H-85B0																		T4	150	4G6	12-4c	135	M32	13-20	135
MVE 5300/075H-85C1	MVE 5300/090H-85C1	MVE 11660/8H-85C1																		T4	150	4G6	12-4c	135	M32	13-20	135
MVE 6500/075H-85A0	MVE 6500/090H-85A0	MVE 14300/8H-85A0	3.80	4.20	5.10	5.63	15.19	8.78	16.60	8.30		12.15	7.02	11.49	6.64	0.75	0.78	3.8	4.2	T4	150	4G6	12-4c	135	M32	13-20	135
MVE 6500/075H-85B0	MVE 6500/090H-85B0	MVE 14300/8H-85B0																		T4	150	4G6	12-4c	135	M32	13-20	135
MVE 6500/075H-85C1	MVE 6500/090H-85C1	MVE 14300/8H-85C1																		T4	150	4G6	12-4c	135	M32	13-20	135
MVE 5300/075H-86C0	MVE 5300/090H-86C0	MVE 11660/8H-86C0	3.90	4.70	5.23	6.30	14.36	8.30	16.60	8.30		11.49	6.64	11.49	6.64			3.7	3.7	T4	150	4G6	12-4c	135	M32	13-20	135
MVE 6500/075H-86C0	MVE 6500/090H-86C0	MVE 14300/8H-86C0	3.90	4.70	5.23	6.30	14.36	8.30	16.60	8.30		11.49	6.64	11.49	6.64			4.2	4.2	T4	150	4G6	12-4c	135	M32	13-20	135
							Winding 400 (Δ)				Winding 500																
							400V (Δ)	/	460V (Δ)	/	500V (Δ)	575V (Δ)															
							50Hz		60Hz		50Hz	60Hz															
MVE 10000/075H-90A0	MVE 10000/090H-90A0	MVE 22000/8H-90A0	6.80	7.50	9.12	10.06	13.50	/	12.50	/	10.80	10.00			0.74	0.75	3.7	4.4	T4	150	4G6	12-4c	135	M32	13-20	135
MVE 10000/075H-90B0	MVE 10000/090H-90B0	MVE 22000/8H-90B0																	T4	150	4G6	12-4c	135	M32	13-20	135
MVE 10000/075H-91A0	MVE 10000/090H-91A0	MVE 22000/8H-91A0	6.00	7.00	8.05	9.39	14.40	/	14.00	/	11.52	11.20					4.7	4.7	T4	150	4G6	12-4c	135	M32	13-20	135
MVE 10000/075H-91B0	MVE 10000/090H-91B0	MVE 22000/8H-91B0																	T4	150	4G6	12-4c	135	M32	13-20	135

(*) Certification level.
(**) Working moment = 2 x static moment.
(***) Custom footprint (available on request.

Dimension with coarse degree of accurancy related to UNI 22768/1
Rights reserved to modify technical specifications.

Type 50 Hz	Type 60 Hz	For U.S. Market	Electric Features																					
			power				Current (A max)										Ia/In		-20°C to 40°C		Cable Type			Cable gland		
			Kw		Hp		Winding 230/400					Winding 290/500							ClassII Div.2	II 2D	IEC type	U.S. Market Type: AWG (SOW)	Class temp. °C	IEC type	Clamp. cable Ø	Class temp. °C
			50 hz	60 hz	50 hz	60 hz	230V (Δ)	400V (Y)	230V (Δ)	460V (Y)		290V (Δ)	500V (Y)	330V (Δ)	575V (Y)	50Hz	60Hz		Temp. Class T	Temp. Class (°C)					mm	
							50Hz		60Hz			50Hz		60Hz												
MVE 60/3J-10A0	MVE 60/36J-10A0	MVE 160/2J-10A0	0.09	0.09	0.12	0.12	0.43	0.25	0.46	0.23		0.35	0.20	0.32	0.18	3.2	3.2	T4	100	4G1.5	18-4c	80	M16	5-10	80
MVE 100/3J-10A0	MVE 100/36J-10A0	MVE 220/2J-10A0	0.09	0.09	0.12	0.12	0.43	0.25	0.46	0.23		0.35	0.20	0.32	0.18	3.2	3.2	T4	100	4G1.5	18-4c	80	M16	5-10	80
MVE 200/3J-20A0	MVE 200/36J-20A0	MVE 440/2J-20A0	0.15	0.18	0.20	0.24	0.61	0.35	0.60	0.30		0.48	0.28	0.42	0.24	3.5	3.5	T4	100	4G2.5	16-4c	80	M20	7-13	80
MVE 200/3J-20AX	MVE 200/36J-20AX	MVE 440/2J-20AX																T4	100	4G2.5	16-4c	80	M20	7-13	80
MVE 200/3J-23A0	MVE 200/36J-23A0	MVE 440/2J-23A0	0.15	0.18	0.20	0.24	0.61	0.35	0.60	0.30		0.48	0.28	0.42	0.24	3.5	3.5	T4	100	4G2.5	16-4c	80	M20	7-13 7-13 7-13 7-13	80
MVE 300/3J-30A0	MVE 300/36J-30A0	MVE 690/2J-30A0	0.25	0.28	0.34	0.38	0.90	0.52	0.90	0.45		0.72	0.42	0.62	0.36	3.8	3.7	T4	100	4G2.5	16-4c	80	M20	7-13	80
MVE 300/3J-30AX	MVE 300/36J-30AX	MVE 690/2J-30AX																T4	100	4G2.5	16-4c	80	M20	7-13	80
MVE 400/3J-30A0	MVE 400/36J-30A0	MVE 890/2J-30A0	0.27	0.33	0.36	0.44	1.00	0.58	1.20	0.60		0.80	0.46	0.83	0.48	3.7	3.7	T4	100	4G2.5	16-4c	80	M20	7-13	80
MVE 400/3J-30AX	MVE 400/36J-30AX	MVE 890/2J-30AX																T4	100	4G2.5	16-4c	80	M20	7-13	80
MVE 500/3J-40A0	MVE 500/36J-40A0	MVE 1200/2J-40A0	0.50	0.58	0.67	0.78	1.66	0.96	1.94	0.97		1.33	0.77	1.34	0.78	4.2	4.4	T4	135	4G2.5	16-4c	120	M20	7-13	120
MVE 500/3J-40AX	MVE 500/36J-40AX	MVE 1200/2J-40AX																T4	135	4G2.5	16-4c	120	M20	7-13	120
MVE 700/3J-40A0	MVE 700/36J-40A0	MVE 1700/2J-40A0	0.59	0.61	0.79	0.82	2.16	1.25	2.48	1.24		1.73	1.00	1.72	0.99	4.5	5.2	T4	135	4G2.5	16-4c	120	M20	7-13	120
MVE 700/3J-40AX	MVE 700/36J-40AX	MVE 1700/2J-40AX																T4	135	4G2.5	16-4c	120	M20	7-13	120
MVE 800/3J-50A0	MVE 800/36J-50A0	MVE 1800/2J-50A0	0.70	0.84	0.94	1.13	2.51	1.45	3.00	1.50		2.01	1.16	2.08	1.20	4.0	4.0	T4	135	4G2.5	16-4c	120	M20	7-13	120
MVE 800/3J-50C0	MVE 800/36J-50C0	MVE 1800/2J-50C0																T4	135	4G2.5	16-4c	120	M20	7-13	120
MVE 1200/3J-50A0	MVE 1200/36J-50A0	MVE 2300/2J-50A0	0.95	1.15	1.27	1.54	3.20	1.85	3.90	1.95		2.56	1.48	2.70	1.56	4.6	4.7	T4	135	4G2.5	16-4c	120	M20	7-13	120
MVE 1200/3J-50C0	MVE 1200/36J-50C0	MVE 2300/2J-50C0																T4	135	4G2.5	16-4c	120	M20	7-13	120
MVE 1300/3J-50A0	MVE 1300/36J-50A0	MVE 3100/2J-50A0	1.30	1.38	1.74	1.85	4.22	2.44	4.50	2.25		3.38	1.95	3.11	1.80	5.4	5.2	T4	135	4G2.5	16-4c	120	M20	7-13	120
MVE 1300/3J-51A0	MVE 1300/36J-51A0	MVE 3100/2J-51A0																T4	135	4G2.5	16-4c	120	M20	7-13	120
MVE 1300/3J-50C0	MVE 1300/36J-50C0	MVE 3100/2J-50C0																T4	135	4G2.5	16-4c	120	M20	7-13	120
MVE 1150/3J-60C0	MVE 1150/36J-60C0	MVE 2500/2J-60C0	1.54	1.60	2.07	2.15	5.09	2.94	5.22	2.61		4.07	2.35	3.61	2.09	6.1	6.4	T4	135	4G4	14-4c	120	M25	10-16	120
MVE 1600/3J-60A0	MVE 1600/36J-60A0	MVE 3500/2J-60A0	1.54	1.60	2.07	2.15	5.09	2.94	5.22	2.61		4.07	2.35	3.61	2.09	6.1	6.4	T4	135	4G4	14-4c	120	M25	10-16	120
MVE 1600/3J-60C0	MVE 1600/36J-60C0	MVE 3500/2J-60C0																T4	135	4G4	14-4c	120	M25	10-16	120
MVE 2000/3J-60A0	MVE 2000/36J-60A0	MVE 4100/2J-60A0	2.00	2.10	2.68	2.82	6.49	3.75	6.84	3.42		5.19	3.00	4.73	2.74	6.7	6.6	T4	135	4G4	14-4c	120	M25	10-16	120
MVE 2000/3J-60C0	MVE 2000/36J-60C0	MVE 4100/2J-60C0																T4	135	4G4	14-4c	120	M25	10-16	120
MVE 2300/3J-60A0	MVE 2300/36J-60A0	MVE 5100/2J-60A0	2.40	2.45	3.22	3.29	7.68	4.44	6.90	3.45		6.14	3.55	4.77	2.76	6.2	6.5	T4	135	4G4	14-4c	120	M25	10-16	120
MVE 2300/3J-60C0	MVE 2300/36J-60C0	MVE 5100/2J-60C0																T4	135	4G4	14-4c	120	M25	10-16	120

(*) Certification level.
(**) Working moment = 2 x static moment.
(***) Working moment = 2 x static moment.

Dimension with coarse degree of accurancy related to UNI 22768/1
Rights reserved to modify technical specifications.

Type 50 Hz	Type 60 Hz	For U.S. Market	Electric Features																								
			power				Current (A max)										Ia/In		-20°C to 40°C		Cable Type				Cable gland		
			Kw		Hp		Winding 230/400					Winding 290/500							ClassII Div.2	II 2D	IEC type	U.S. Market Type: AWG (SOW)	Class temp. °C	IEC type	Clamp. cable Ø	Class temp. °C
			50 hz	60 hz	50 hz	60 hz	230V (Δ)	400V (Y)	230V (Δ)	460V (Y)		290V (Δ)	500V (Y)	330V (Δ)	575V (Y)		50Hz	60Hz	Temp. Class	Temp. Class						
							50Hz		60Hz			50Hz		60Hz					T	(°C)					mm	
MVE 3200/3J-75A1	MVE 3200/36J-75A1	MVE 7600/2J-75A1	2.76	2.90	3.70	3.89	9.17	5.30	9.22	4.61		7.34	4.24	6.38	3.69		8.5	8.4	T4	135	4G6	12-4c	120	M32	13-20	120
MVE 3200/3J-75C0	MVE 3200/36J-75C0	MVE 7600/2J-75C0																	T4	135	4G6	12-4c	120	M32	13-20	120
MVE 3200/3J-75C1	MVE 3200/36J-75C1	MVE 7600/2J-75C1																	T4	135	4G6	12-4c	120	M32	13-20	120
MVE 4000/3J-75A1	MVE 4000/36J-75A1	MVE 8800/2J-75A1	2.90	2.90	3.89	3.89	9.17	5.30	9.22	4.61		7.34	4.24	6.38	3.69		8.7	9.9	T4	135	4G6	12-4c	120	M32	13-20	120
MVE 4000/3J-75C0	MVE 4000/36J-75C0	MVE 8800/2J-75C0																	T4	135	4G6	12-4c	120	M32	13-20	120
MVE 4000/3J-75C1	MVE 4000/36J-75C1	MVE 8800/2J-75C1																	T4	135	4G6	12-4c	120	M32	13-20	120
MVE 5000/3J-75A1	MVE 5000/36J-75A1	MVE 11500/2J-75A1	4.00	4.00	5.36	5.36	12.49	7.22	12.56	6.28		9.99	5.78	8.69	5.02		8.7	10.0	T4	135	4G6	12-4c	120	M32	13-20	120
MVE 5000/3J-75C0	MVE 5000/36J-75C0	MVE 11500/2J-75C0																	T4	135	4G6	12-4c	120	M32	13-20	120
MVE 5000/3J-75C1	MVE 5000/36J-75C1	MVE 11500/2J-75C1																	T4	135	4G6	12-4c	120	M32	13-20	120
							Winding 400/690				Winding 500 (Δ)																
							400V (Δ)	690V (Y)	460V (Δ)	/	500V (Δ)	575V (Δ)															
							50Hz		60Hz		50Hz	60Hz															
MVE 6500/3J-85A0	MVE 6500/36J-85A0	MVE 14400/2J-85A0	5.23	5.50	7.01	7.38	9.43	5.45	8.20	/	7.54	6.56					8.7	9.0	T4	135	4G6	12-4c	120	M32	13-20	120
MVE 6500/3J-85B0	MVE 6500/36J-85B0	MVE 14400/2J-85B0																	T4	135	4G6	12-4c	120	M32	13-20	120
MVE 6500/3J-85C1	MVE 6500/36J-85C1	MVE 14400/2J-85C1																	T4	135	4G6	12-4c	120	M32	13-20	120
MVE 9000/3J-85A0	MVE 9000/36J-85A0	MVE 20100/2J-85A0	9.50	9.30	12.74	12.47	17.80	10.29	14.40	/	14.24	11.52					8.6	8.8	T4	135	4G6	12-4c	120	M32	13-20	120
MVE 9000/3J-85B0	MVE 9000/36J-85B0	MVE 20100/2J-85B0																	T4	135	4G6	12-4c	120	M32	13-20	120
MVE 9000/3J-85C1	MVE 9000/36J-85C1	MVE 20100/2J-85C1																	T4	135	4G6	12-4c	120	M32	13-20	120
MVE 6500/3J-86A0	MVE 6500/36J-86A0	MVE 14400/2J-86A0	5.50	6.30	7.38	8.45	9.50	5.49	9.50	/	7.60	7.60					8.2	7.7	T4	135	4G6	12-4c	120	M32	13-20	120
MVE 6500/3J-86B0	MVE 6500/36J-86B0	MVE 14400/2J-86B0																	T4	135	4G6	12-4c	120	M32	13-20	120
MVE 9000/3J-86A0	MVE 9000/36J-86A0	MVE 20100/2J-86A0	6.60	7.70	8.85	10.33	11.50	6.65	11.50	/	9.20	9.20					8.2	8.2	T4	135	4G6	12-4c	120	M32	13-20	120
MVE 9000/3J-86B0	MVE 9000/36J-86B0	MVE 20100/2J-86B0																	T4	135	4G6	12-4c	120	M32	13-20	120

(*) Certification level.
(**) Working moment = 2 x static moment.
(***) Custom footprint (available on request.

Dimension with coarse degree of accurancy related to UNI 22768/1
Rights reserved to modify technical specifications.

Type 50 Hz	Type 60 Hz	For U.S. Market	Electric Features																	
			power				Current			Capacitor			-20°C to 40°C		Cable Type			Cable gland		
			Kw		Hp		A max			µF			ClassII Div.2	II 2D	IEC type	U.S. Market Type: AWG (SOW)	Class temp. °C	IEC type	Clamp. cable Ø	Class temp. °C
			50 hz	60 hz	50 hz	60 hz	230V 50Hz	220V 60Hz	115V 50/60Hz	230V 50Hz	220V 60Hz	115V 50/60Hz	Temp. Class T	Temp. Class (°C)					mm	
MVE 60/3J-10A0	MVE 60/36J-10A0	MVE 160/2J-10A0	0.08	0.09	0.11	0.12	0.43	0.43	1.03	3	3	6.3	T4	100	4G1.5	18-4c	80	M16	5-10	80
MVE 100/3J-10A0	MVE 100/36J-10A0	MVE 220/2J-10A0	0.1	0.11	0.13	0.15	0.54	0.54	1.3	4	4	8	T4	100	4G1.5	18-4c	80	M16	5-10	80
MVE 200/3J-20A0	MVE 200/36J-20A0	MVE 440/2J-20A0	0.18	0.21	0.24	0.28	1.14	1.14	2.62	8	8	16	T4	100	4G2.5	16-4c	80	M20	7-13	80
MVE 200/3J-20AX	MVE 200/36J-20AX	MVE 440/2J-20AX											T4	100	4G2.5	16-4c	80	M20	7-13	80
MVE 200/3J-23A0	MVE 200/36J-23A0	MVE 440/2J-23A0	0.18	0.21	0.24	0.28	1.14	1.14	2.62	8	8	16	T4	100	4G2.5	16-4c	80	M20	7-13	80
													T4	100	4G2.5	16-4c	80	M20	7-13	80
													T4	100	4G2.5	16-4c	80	M20	7-13	80
													T4	100	4G2.5	16-4c	80	M20	7-13	80
MVE 300/3J-30A0	MVE 300/36J-30A0	MVE 690/2J-30A0	0.27	0.28	0.36	0.38	1.58	1.58	3.43	12.5	12.5	25.0	T4	100	4G2.5	16-4c	80	M20	7-13	80
													T4	100	4G2.5	16-4c	80	M20	7-13	80
													T4	100	4G2.5	16-4c	80	M20	7-13	80
													T4	100	4G2.5	16-4c	80	M20	7-13	80
MVE 300/3J-30AX	MVE 300/36J-30AX	MVE 690/2J-30AX											T4	100	4G2.5	16-4c	80	M20	7-13	80

(*) Certification level.
(**) Working moment = 2 x static moment.
(***) Working moment = 2 x static moment.

Dimension with coarse degree of accurancy related to UNI 22768/1
Rights reserved to modify technical specifications.

Type 50 Hz	Type 60 Hz	For U.S. Market	Electric Features																								
			power				Current (A max)								Ia/In		-20°C to 40°C		Cable Type			Cable gland					
			Kw		Hp		Winding 230/400					Winding 290/500					Class II Div.2	II 2D	IEC type	U.S. Market Type: AWG (SOW)	Class temp. °C	IEC type	Clamp. cable Ø	Class temp. °C			
			50 hz	60 hz	50 hz	60 hz	230V (Δ)	400V (Y)	230V (Δ)	460V (Y)		290V (Δ)	500V (Y)	330V (Δ)	575V (Y)	50Hz	60Hz	Temp. Class	Temp. Class					mm				
							50Hz		60Hz			50Hz		60Hz			T	(°C)									
MVE 40/15J-10A0	MVE 40/18J-10A0	MVE 70/4J-10A0	0.03	0.04	0.04	0.05	0.54	0.31	0.62	0.31		0.43	0.25	0.43	0.25	2.2	2.2	T4	100.00	4G1.5	18-4c	80	M16	5-10	80			
MVE 90/15J-20A0	MVE 90/18J-20A0	MVE 200/4J-20A0	0.07	0.08	0.09	0.11	0.54	0.31	0.50	0.25		0.43	0.25	0.35	0.20	2.2	2.2	T4	100	4G2.5	16-4c	80	M20	7-13	80			
MVE 90/15J-20AX	MVE 90/18J-20AX	MVE 200/4J-20AX																T4	100	4G2.5	16-4c	80	M20	7-13	80			
MVE 90/15J-23A0	MVE 90/18J-23A0	MVE 200/4J-23A0	0.07	0.84	0.09	1.13	0.54	0.31	0.50	0.25		0.43	0.25	0.35	0.20	2.2	2.2	T4	100	4G2.5	16-4c	80	M20	7-13	80			
																		T4	100	4G2.5	16-4c	80	M20	7-13	80			
																		T4	100	4G2.5	16-4c	80	M20	7-13	80			
MVE 200/15J-30A0	MVE 200/18J-30A0	MVE 400/4J-30A0	0.12	0.15	0.16	0.19	0.85	0.49	1.00	0.50		0.68	0.39	0.69	0.40	2.2	2.2	T4	100	4G2.5	16-4c	80	M20	7-13	80			
																		T4	100	4G2.5	16-4c	80	M20	7-13	80			
																		T4	100	4G2.5	16-4c	80	M20	7-13	80			
MVE 200/15J-30AX	MVE 200/18J-30AX	MVE 400/4J-30AX																T4	100	4G2.5	16-4c	80	M20	7-13	80			
MVE 400/15J-40A0	MVE 400/18J-40A0	MVE 860/4J-40A0	0.27	0.32	0.36	0.43	1.45	0.84	1.72	0.86		1.16	0.67	1.19	0.69	2.7	2.7	T4	135	4G2.5	16-4c	120	M20	7-13	120			
MVE 400/15J-40AX	MVE 400/18J-40AX	MVE 860/4J-40AX																T4	135	4G2.5	16-4c	120	M20	7-13	120			
MVE 500/15J-40A0	MVE 500/18J-40A0	MVE 1150/4J-40AX	0.35	0.40	0.47	0.54	1.83	1.06	2.18	1.09		1.47	0.85	1.51	0.87	3.0	2.9	T4	135	4G2.5	16-4c	120	M20	7-13	120			
MVE 500/15J-40AX	MVE 500/18J-40AX	MVE 1150/4J-40AX																T4	135	4G2.5	16-4c	120	M20	7-13	120			
MVE 300/15J-50A0	MVE 300/18J-50A0	MVE 750/4J-50A0	0.62	0.73	0.83	0.98	2.28	1.32	2.40	1.20		1.83	1.06	1.66	0.96	3.2	3.4	T4	135	4G2.5	16-4c	120	M20	7-13	120			
MVE 300/15J-50C0	MVE 300/18J-50C0	MVE 750/4J-50C0																T4	135	4G2.5	16-4c	120	M20	7-13	120			
MVE 300/15J-51A0	MVE 300/18J-51A0	MVE 750/4J-51A0																T4	135	4G2.5	16-4c	120	M20	7-13	120			
MVE 700/15J-50A0	MVE 700/18J-50A0	MVE 1530/4J-50A0	0.62	0.73	0.83	0.98	2.28	1.32	2.40	1.20		1.83	1.06	1.66	0.96	3.2	3.4	T4	135	4G2.5	16-4c	120	M20	7-13	120			
MVE 700/15J-50C0	MVE 700/18J-50C0	MVE 1530/4J-50C0																T4	135	4G2.5	16-4c	120	M20	7-13	120			
MVE 710/15J-50A0	MVE 710/18J-50A0	MVE 1540/4J-50A0	0.62	0.73	0.83	0.98	2.28	1.32	2.40	1.20		1.83	1.06	1.66	0.96	3.2	3.4	T4	135	4G2.5	16-4c	120	M20	7-13	120			
MVE 710/15J-50C0	MVE 710/18J-50C0	MVE 1540/4J-50C0																T4	135	4G2.5	16-4c	120	M20	7-13	120			
MVE 950/15J-50A0	MVE 950/18J-50A0	MVE 2100/4J-50A0	0.64	0.77	0.86	1.03	2.42	1.40	2.70	1.35		1.94	1.12	1.87	1.08	4.2	4.2	T4	135	4G2.5	16-4c	120	M20	7-13	120			
MVE 950/15J-50C0	MVE 950/18J-50C0	MVE 2100/4J-50C0																T4	135	4G2.5	16-4c	120	M20	7-13	120			
MVE 1100/15J-50A0	MVE 1100/18J-50A0	MVE 2300/4J-50A0	0.64	0.77	0.86	1.03	2.42	1.40	2.70	1.35		1.94	1.12	1.87	1.08	4.0	4.0	T4	135	4G2.5	16-4c	120	M20	7-13	120			
MVE 1100/15J-50C0	MVE 1100/18J-50C0	MVE 2300/4J-50C0																T4	135	4G2.5	16-4c	120	M20	7-13	120			
MVE 1100/15J-51A0	MVE 1100/18J-51A0	MVE 2300/4J-51A0																T4	135	4G2.5	16-4c	120	M20	7-13	120			
MVE 1400/15J-60A0	MVE 1400/18J-60A0	MVE 3100/4J-60A0	0.70	0.84	0.94	1.13	3.08	1.78	3.56	1.78		2.46	1.42	2.46	1.42	4.2	4.2	T4	135	4G4	14-4c	120	M25	10-16	120			
MVE 1400/15J-60C0	MVE 1400/18J-60C0	MVE 3100/4J-60C0																T4	135	4G4	14-4c	120	M25	10-16	120			
MVE 1700/15J-60A0	MVE 1700/18J-60A0	MVE 3880/4J-60A0	1.13	1.30	1.52	1.74	3.74	2.16	4.18	2.09		2.99	1.73	2.89	1.67	4.9	4.7	T4	135	4G4	14-4c	120	M25	10-16	120			
MVE 1700/15J-60C0	MVE 1700/18J-60C0	MVE 3880/4J-60C0																T4	135	4G4	14-4c	120	M25	10-16	120			
MVE 2400/15J-60A0	MVE 2400/18J-60A0	MVE 5340/4J-60A0	1.57	1.88	2.11	2.53	5.54	3.20	6.40	3.20		4.43	2.56	4.43	2.56	5.1	5.1	T4	135	4G4	14-4c	120	M25	10-16	120			
MVE 2400/15J-60C0	MVE 2400/18J-60C0	MVE 5340/4J-60C0																T4	135	4G4	14-4c	120	M25	10-16	120			
MVE 2500/15J-70A0	MVE 2500/18J-70A0	MVE 5700/4J-70A0	1.76	2.00	2.36	2.68	5.33	3.08	6.00	3.00		4.26	2.46	4.15	2.40	6.2	6.3	T4	135	4G4	14-4c	120	M25	10-16	120			
MVE 2500/15J-70B0	MVE 2500/18J-70B0	MVE 5700/4J-70B0																T4	135	4G4	14-4c	120	M25	10-16	120			
MVE 2500/15J-70C0	MVE 2500/18J-70C0	MVE 5700/4J-70C0																T4	135	4G4	14-4c	120	M25	10-16	120			
MVE 3000/15J-70A0	MVE 3000/18J-70A0	MVE 6840/4J-70A0	1.90	2.30	2.55	3.08	6.37	3.68	6.60	3.30		5.09	2.94	4.57	2.64	6.7	6.8	T4	135	4G4	14-4c	120	M25	10-16	120			
MVE 3000/15J-70B0	MVE 3000/18J-70B0	MVE 6840/4J-70B0																T4	135	4G4	14-4c	120	M25	10-16	120			
MVE 3000/15J-70C0	MVE 3000/18J-70C0	MVE 6840/4J-70C0																T4	135	4G4	14-4c	120	M25	10-16	120			

(*) Certification level.
(**) Working moment = 2 x static moment.
(***) Custom footprint (available on request.

Dimension with coarse degree of accurancy related to UNI 22768/1
Rights reserved to modify technical specifications.

Type 50 Hz	Type 60 Hz	For U.S. Market	Electric Features																							
			power				Current (A max)								Ia/In		-20°C to 40°C		Cable Type			Cable gland				
			Kw		Hp		Winding 230/400					Winding 290/500					ClassII Div.2	II 2D	IEC type	U.S. Market Type: AWG (SOW)	Class temp. °C	IEC type	Clamp. cable Ø	Class temp. °C		
			50 hz	60 hz	50 hz	60 hz	230V (Δ)	400V (Y)	230V (Δ)	460V (Y)		290V (Δ)	500V (Y)	330V (Δ)	575V (Y)	50Hz	60Hz	Temp. Class T	Temp. Class (°C)					mm		
							50Hz		60Hz			50Hz		60Hz												
MVE 3800/15J-75A0	MVE 3800/18J-75A0	MVE 8400/4J-75A0															T4	135	4G6	12-4c	120	M32	13-20	120		
MVE 3800/15J-75C0	MVE 3800/18J-75C0	MVE 8400/4J-75C0	2.20	2.60	2.95	3.49	7.18	4.15	8.30	4.15		5.74	3.32	5.74	3.32	7.0	7.0	T4	135	4G6	12-4c	120	M32	13-20	120	
MVE 3800/15J-75C1	MVE 3800/18J-75C1	MVE 8400/4J-75C1															T4	135	4G6	12-4c	120	M32	13-20	120		
MVE 4300/15J-75A0	MVE 4300/18J-75A0	MVE 9480/4J-75A0															T4	135	4G6	12-4c	120	M32	13-20	120		
MVE 4300/15J-75C0	MVE 4300/18J-75C0	MVE 9480/4J-75C0	2.50	3.00	3.35	4.02	7.79	4.50	9.20	4.60		6.23	3.60	6.37	3.68	7.2	7.4	T4	135	4G6	12-4c	120	M32	13-20	120	
MVE 4300/15J-75C1	MVE 4300/18J-75C1	MVE 9480/4J-75C1															T4	135	4G6	12-4c	120	M32	13-20	120		
MVE 3800/15J-80C0	MVE 3800/18J-80C0	MVE 12260/4J-80C0	3.00	3.50	4.02	4.69	10.38	6.00	12.00	6.00		8.30	4.80	8.30	4.80	7.2	6.5	T4	135	4G6	12-4c	120	M32	13-20	120	
MVE 5400/15J-80C0	MVE 5400/18J-80C0	MVE 11880/4J-80C0	3.00	3.50	4.02	4.69	10.38	6.00	12.00	6.00		8.30	4.80	8.30	4.80	7.2	6.5	T4	135	4G6	12-4c	120	M32	13-20	120	
MVE 5500/15J-80A0	MVE 5500/18J-80A0	MVE 12260/4J-80A0	2.88	3.45	3.86	4.63	11.25	6.50	11.00	5.50		9.00	5.20	7.61	4.40	7.3	7.2	T4	135	4G6	12-4c	120	M32	13-20	120	
							Winding 400/690				Winding 500															
							400V (Δ)	690V (Y)	460V (Δ)	/	500V (Δ)	575V (Δ)														
							50Hz		60Hz		50Hz	60Hz														
MVE 7200/15J-85A0	MVE 7200/18J-85A0	MVE 15850/4J-85A0															T4	135	4G6	12-4c	120	M32	13-20	120		
MVE 7200/15J-85B0	MVE 7200/18J-85B0	MVE 15850/4J-85B0	4.00	4.80	5.36	6.44	8.50	4.91	8.70	/	6.80	6.96				7.00	7.10	T4	135	4G6	12-4c	120	M32	13-20	120	
MVE 7200/15J-85C1	MVE 7200/18J-85C1	MVE 15850/4J-85C1															T4	135	4G6	12-4c	120	M32	13-20	120		
MVE 9000/15J-85A0	MVE 9000/18J-85A0	MVE 19800/4J-85A0															T4	135	4G6	12-4c	120	M32	13-20	120		
MVE 9000/15J-85B0	MVE 9000/18J-85B0	MVE 19800/4J-85B0	7.35	8.50	9.86	11.40	13.40	7.75	12.00	/	10.72	9.60				7.20	7.20	T4	135	4G6	12-4c	120	M32	13-20	120	
MVE 9000/15J-85C1	MVE 9000/18J-85C1	MVE 19800/4J-85C1															T4	135	4G6	12-4c	120	M32	13-20	120		
MVE 7200/15J-86A0	MVE 7200/18J-86A0	MVE 15850/4J-86A0	6.00	6.50	8.05	8.72	11.00	6.36	10.80	/	8.80	8.64				4.70	4.50	T4	135	4G6	12-4c	120	M32	13-20	120	
MVE 7200/15J-86B0	MVE 7200/18J-86B0	MVE 15850/4J-86B0																T4	135	4G6	12-4c	120	M32	13-20	120	
MVE 7200/15J-86C0	MVE 7200/18J-86C0	MVE 15850/4J-86C0	6.00	6.50	8.05	8.72	11.00	6.36	10.80	/	8.80	8.64				4.70	4.50	T4	135	4G6	12-4c	120	M32	13-20	120	
MVE 7200/15J-86C1	MVE 7200/18J-86C1	MVE 15850/4J-86C1																T4	135	4G6	12-4c	120	M32	13-20	120	
MVE 9000/15J-86A0	MVE 9000/18J-86A0	MVE 19800/4J-86A0	6.00	6.50	8.05	8.72	11.00	6.36	10.80	/	8.80	8.64				4.70	4.50	T4	135	4G6	12-4c	120	M32	13-20	120	
MVE 9000/15J-86B0	MVE 9000/18J-86B0	MVE 19800/4J-86B0																T4	135	4G6	12-4c	120	M32	13-20	120	
MVE 9000/15J-86C0	MVE 9000/18J-86C0	MVE 19800/4J-86C0	6.00	6.50	8.05	8.72	11.00	6.36	10.80	/	8.80	8.64				4.70	4.50	T4	135	4G6	12-4c	120	M32	13-20	120	
MVE 9000/15J-86C1	MVE 9000/18J-86C1	MVE 19800/4J-86C1																T4	135	4G6	12-4c	120	M32	13-20	120	
MVE 10000/15J-90A0	MVE 10000/18J-90A0	MVE 21000/4J-90A0	5.40	7.00	7.24	9.39	13.00	7.51	13.00	/	10.40	10.40				6.70	6.60	T4	135	4G6	12-4c	120	M32	13-20	120	
MVE 10000/15J-90B0	MVE 10000/18J-90B0	MVE 21000/4J-90B0																T4	135	4G6	12-4c	120	M32	13-20	120	
MVE 10000/15J-91A0	MVE 10000/18J-91A0	MVE 21000/4J-91A0	7.00	8.20	9.39	11.00	13.10	7.57	13.10	/	10.48	10.48				7.20	7.70	T4	135	4G6	12-4c	120	M32	13-20	120	
MVE 10000/15J-91B0	MVE 10000/18J-91B0	MVE 21000/4J-91B0																T4	135	4G6	12-4c	120	M32	13-20	120	

(*) Certification level.
(**) Working moment = 2 x static moment.
(***) Working moment = 2 x static moment.

Dimension with coarse degree of accurancy related to UNI 22768/1
Rights reserved to modify technical specifications.

Type 50 Hz	Type 60 Hz	For U.S. Market	Electric Features																								
			power				Current (A max)												Ia/In		-20°C to 40°C		Cable Type			Cable gland		
			Kw		Hp		Winding 230/400				Winding 400/690		Winding 290/500								ClassII Div.2	II 2D	IEC type	U.S. Market Type: AWG (SOW)	Class temp. °C	IEC type	Clamp. cable Ø	Class temp. °C
			50 hz	60 hz	50 hz	60 hz	230V (Δ)	400V (Y)	230V (Δ)	460V (Y)	400V (Δ)	690V (Y)	290V (Δ)	500V (Y)	330V (Δ)	575V (Y)	50Hz	60Hz			Temp. Class	Temp. Class					mm	
							50Hz		60Hz		50Hz		50Hz		60Hz						T	(°C)						
MVE 50/1J-30A0	MVE 50/12J-30A0	MVE 90/6J-30A0	0.12	0.14	0.16	0.19	0.52	0.30	0.80	0.40	0.32	0.38	0.42	0.24	0.55	0.32	2.20	2.20	T4	100	4G2.5	16-4c	80	M20	7-13	80
MVE 50/1J-30AX	MVE 50/12J-30AX	MVE 90/6J-30AX																	T4	100	4G2.5	16-4c	80	M20	7-13	80
MVE 100/1J-30A0	MVE 100/12J-30A0	MVE 220/6J-30A0	0.12	0.14	0.16	0.19	0.52	0.30	0.80	0.40	0.32	0.38	0.42	0.24	0.55	0.32	2.20	2.20	T4	100	4G2.5	16-4c	80	M20	7-13	80
MVE 100/1J-30AX	MVE 100/12J-30AX	MVE 220/6J-30AX																	T4	100	4G2.5	16-4c	80	M20	7-13	80
MVE 200/1J-40A0	MVE 200/12J-40A0	MVE 410/6J-40A0	0.15	0.18	0.20	0.24	1.12	0.65	1.25	0.63	0.37	0.42	0.90	0.52	0.87	0.50	2.20	2.20	T4	135	4G2.5	16-4c	120	M20	7-13	120
MVE 200/1J-40AX	MVE 200/12J-40AX	MVE 410/6J-40AX																	T4	135	4G2.5	16-4c	120	M20	7-13	120
MVE 300/1J-50A0	MVE 300/12J-50A0	MVE 680/6J-50A0	0.25	0.30	0.34	0.40	1.16	0.67	1.28	0.64	0.68	0.72	0.93	0.54	0.89	0.51	2.70	2.70	T4	135	4G2.5	16-4c	120	M20	7-13	120
MVE 300/1J-50C0	MVE 300/12J-50C0	MVE 680/6J-50C0																	T4	135	4G2.5	16-4c	120	M20	7-13	120
MVE 500/1J-50A0	MVE 500/12J-50A0	MVE 1100/6J-50A0	0.35	0.40	0.47	0.54	2.11	1.22	2.30	1.15	0.60	0.64	1.69	0.98	1.59	0.92	3.00	2.90	T4	135	4G2.5	16-4c	120	M20	7-13	120
MVE 500/1J-50C0	MVE 500/12J-50C0	MVE 1100/6J-50C0																	T4	135	4G2.5	16-4c	120	M20	7-13	120
MVE 510/1J-50A0	MVE 510/12J-50A0	MVE 1600/6J-50A0	0.35	0.40	0.47	0.54	2.08	1.20	2.30	1.15	0.60	0.64	1.66	0.96	1.59	0.92	3.00	2.90	T4	135	4G2.5	16-4c	120	M20	7-13	120
MVE 510/1J-50C0	MVE 510/12J-50C0	MVE 1600/6J-50C0																	T4	135	4G2.5	16-4c	120	M20	7-13	120
MVE 800/1J-60A0	MVE 800/12J-60A0	MVE 1730/6J-60A0	0.75	0.80	1.01	1.07	2.46	1.42	2.64	1.32	0.66	0.70	1.97	1.14	1.83	1.06	3.40	3.30	T4	135	4G4	14-4c	120	M25	10-16	120
MVE 800/1J-60C0	MVE 800/12J-60C0	MVE 1730/6J-60C0																	T4	135	4G4	14-4c	120	M25	10-16	120
MVE 1100/1J-60A0	MVE 1100/12J-60A0	MVE 2350/6J-60A0	0.75	0.80	1.01	1.07	2.46	1.42	2.64	1.32	0.59	0.64	1.97	1.14	1.83	1.06	3.40	3.30	T4	135	4G4	14-4c	120	M25	10-16	120
MVE 1100/1J-60C0	MVE 1100/12J-60C0	MVE 2350/6J-60C0																	T4	135	4G4	14-4c	120	M25	10-16	120
MVE 1500/1J-60A0	MVE 1500/12J-60A0	MVE 3090/6J-60A0	0.90	1.08	1.21	1.45	3.11	1.80	4.00	2.00			2.49	1.44	2.77	1.60	3.50	3.50	T4	135	4G4	14-4c	120	M25	10-16	120
MVE 1500/1J-60C0	MVE 1500/12J-60C0	MVE 3090/6J-60C0																	T4	135	4G4	14-4c	120	M25	10-16	120
MVE 1600/1J-70A0	MVE 1600/12J-70A0	MVE 3580/6J-70A0	0.90	1.08	1.21	1.45	4.15	2.40	4.60	2.30	0.63	0.68	3.32	1.92	3.18	1.84	3.90	3.80	T4	135	4G4	14-4c	120	M25	10-16	120
MVE 1600/1J-70B0	MVE 1600/12J-70B0	MVE 3580/6J-70B0																	T4	135	4G4	14-4c	120	M25	10-16	120
MVE 1600/1J-70C0	MVE 1600/12J-70C0	MVE 3580/6J-70C0																	T4	135	4G4	14-4c	120	M25	10-16	120
MVE 2100/1J-70A0	MVE 2100/12J-70A0	MVE 4740/6J-70A0	1.50	1.80	2.01	2.41	5.19	3.00	6.40	3.20	0.70	0.72	4.15	2.40	4.43	2.56	4.50	4.60	T4	135	4G4	14-4c	120	M25	10-16	120
MVE 2100/1J-70B0	MVE 2100/12J-70B0	MVE 4740/6J-70B0																	T4	135	4G4	14-4c	120	M25	10-16	120
MVE 2100/1J-70C0	MVE 2100/12J-70C0	MVE 4740/6J-70C0																	T4	135	4G4	14-4c	120	M25	10-16	120
MVE 2200/1J-70A0	MVE 2200/12J-70A0	MVE 4850/6J-70A0	1.50	1.80	2.01	2.41	5.19	3.00	6.40	3.20	0.70	0.72	4.15	2.40	4.43	2.56	4.50	4.60	T4	135	4G4	14-4c	120	M25	10-16	120
MVE 2200/1J-70B0	MVE 2200/12J-70B0	MVE 4850/6J-70B0																	T4	135	4G4	14-4c	120	M25	10-16	120
MVE 2200/1J-70C0	MVE 2200/12J-70C0	MVE 4850/6J-70C0																	T4	135	4G4	14-4c	120	M25	10-16	120
MVE 2600/1J-75A0	MVE 2600/12J-75A0	MVE 5690/6J-75A0	1.96	2.10	2.63	2.82	7.09	4.10	8.00	4.00	0.68	0.70	5.67	3.28	5.54	3.20	5.00	5.00	T4	135	4G6	12-4c	120	M32	13-20	120
MVE 2600/1J-75C0	MVE 2600/12J-75C0	MVE 5690/6J-75C0																	T4	135	4G6	12-4c	120	M32	13-20	120
MVE 2600/1J-75C1	MVE 2600/12J-75C1	MVE 5690/6J-75C1																	T4	135	4G6	12-4c	120	M32	13-20	120
MVE 3000/1J-75A0	MVE 3000/12J-75A0	MVE 6620/6J-75A0	2.20	2.40	2.95	3.22	7.79	4.50	8.60	4.30	0.72	0.75	6.23	3.60	5.95	3.44	5.20	5.20	T4	135	4G6	12-4c	120	M32	13-20	120
MVE 3000/1J-75C0	MVE 3000/12J-75C0	MVE 6620/6J-75C0																	T4	135	4G6	12-4c	120	M32	13-20	120
MVE 3000/1J-75C1	MVE 3000/12J-75C1	MVE 6620/6J-75C1																	T4	135	4G6	12-4c	120	M32	13-20	120
MVE 3700/1J-75A0	MVE 3700/12J-75A0	MVE 8160/6J-75A0	2.20	2.40	2.95	3.22	7.79	4.50	8.60	4.30	0.72	0.75	6.23	3.60	5.95	3.44	5.20	5.20	T4	135	4G6	12-4c	120	M32	13-20	120
MVE 3700/1J-75C0	MVE 3700/12J-75C0	MVE 8160/6J-75C0																	T4	135	4G6	12-4c	120	M32	13-20	120
MVE 3700/1J-75C1	MVE 3700/12J-75C1	MVE 8160/6J-75C1																	T4	135	4G6	12-4c	120	M32	13-20	120
MVE 4700/1J-80C0	MVE 4700/12J-80C0	MVE 10380/6J-80C0	3.20	3.90	4.29	5.23	11.25	6.50	13.90	6.95	0.64	0.69	9.00	5.20	9.62	5.56	5.70	5.90	T4	135	4G6	12-4c	120	M32	13-20	120
MVE 5200/1J-80C0	MVE 5200/12J-80C0	MVE 11500/6J-80C0	3.80	4.00	5.10	5.36	11.97	6.92	12.72	6.36	0.69	0.74	9.58	5.54	8.80	5.09	5.70	5.70	T4	135	4G6	12-4c	120	M32	13-20	120
MVE 3800/1J-80A0	MVE 3800/12J-80A0	MVE 8450/6J-80A0	2.50	3.00	3.35	4.02	9.52	5.50	10.60	5.30	0.71	0.75	7.61	4.40	7.34	4.24	6.10	6.20	T4	135	4G6	12-4c	120	M32	13-20	120
MVE 3800/1J-80C0	MVE 3800/12J-80C0	MVE 8450/6J-80C0	2.50	3.00	3.35	4.02	9.52	5.50	10.60	5.30	0.71	0.75	7.61	4.40	7.34	4.24	0.20	0.20	T4	135	4G6	12-4c	120	M32	13-20	120
MVE 4700/1J-80A0	MVE 4700/12J-80A0	MVE 10370/6J-80A0	3.20	3.90	4.29	5.23	11.25	6.50	13.90	6.95	0.64	0.69	9.00	5.20	9.62	5.56	5.70	5.90	T4	135	4G6	12-4c	120	M32	13-20	120

(*) Certification level.
(**) Working moment = 2 x static moment.
(***) Custom footprint (available on request.

Dimension with coarse degree of accurancy related to UNI 22768/1
Rights reserved to modify technical specifications.

Type 50 Hz	Type 60 Hz	For U.S. Market	Electric Features																													
			power				Current (A max)														Ia/In		-20°C to 40°C		Cable Type				Cable gland			
			Kw		Hp		Winding 230/400				Winding 400/690				Winding 290/500						Class II Div.2	II 2D	IEC type	U.S. Market Type: AWG (SOW)	Class temp. °C	IEC type	Clamp. cable Ø	Class temp. °C				
			50 hz	60 hz	50 hz	60 hz	230V (Δ)	400V (Y)	230V (Δ)	460V (Y)	400V (Δ)	690V (Y)			290V (Δ)	500V (Y)	330V (Δ)	575V (Y)	50Hz	60Hz	Temp. Class	Temp. Class (°C)										
							50Hz		60Hz		50Hz				50Hz		60Hz				T						mm			
MVE 5200/1J-85A0	MVE 5200/12J-85A0	MVE 11500/6J-85A0																			T4	135	4G6	12-4c	120	M32	13-20	120				
MVE 5200/1J-85B0	MVE 5200/12J-85B0	MVE 11500/6J-85B0	3.80	4.00	5.10	5.36	11.97	6.92	12.72	6.36	6.92	4			9.58	5.54	8.80	5.09	5.70	5.70	T4	135	4G6	12-4c	120	M32	13-20	120				
MVE 5200/1J-85C1	MVE 5200/12J-85C1	MVE 11500/6J-85C1																			T4	135	4G6	12-4c	120	M32	13-20	120				
MVE 6500/1J-85A0	MVE 6500/12J-85A0	MVE 14360/6J-85A0																			T4	135	4G6	12-4c	120	M32	13-20	120				
MVE 6500/1J-85B0	MVE 6500/12J-85B0	MVE 14360/6J-85B0	4.30	5.00	5.77	6.71	13.42	7.76	15.62	7.81	7.76	4.48			10.74	6.21	10.81	6.25	6.40	6.20	T4	135	4G6	12-4c	120	M32	13-20	120				
MVE 6500/1J-85C1	MVE 6500/12J-85C1	MVE 14360/6J-85C1																			T4	135	4G6	12-4c	120	M32	13-20	120				
MVE 6500/1J-86C0	MVE 6500/12J-86C0	MVE 14360/6J-86C0	4.60	5.50	6.17	7.38	15.57	9.00	20	10.00	9.00	5.2			12.46	7.20	13.84	8.00	6	6.20	T4	135	4G6	12-4c	120	M32	13-20	120				
MVE 7200/1J-86C0	MVE 7200/12J-86C0	MVE 15800/6J-86C0	4.60	5.50	6.17	7.38	15.57	9.00	20	10.00	9.00	5.2			12.46	7.20	13.84	8.00	6	6.20	T4	135	4G6	12-4c	120	M32	13-20	120				
							Winding 400/690				Winding 500		Winding 500																			
							400V (Δ)	690V (Y)	460V (Δ)	/	500V (Δ)	575V (Δ)	500V (Δ)	575V (Δ)																		
							50Hz		60Hz		50Hz	50Hz	50Hz	60Hz																		
MVE 8000/1J-85A0	MVE 8000/12J-85A0	MVE 17750/6J-85A0																			T4	135	4G6	12-4c	120	M32	13-20	120				
MVE 8000/1J-85B0	MVE 8000/12J-85B0	MVE 17750/6J-85B0	5.50	6.60	7.38	8.85	12.60	7.28	11.60	/	0.67	0.72	10.08	9.28					6.20	6.40	T4	135	4G6	12-4c	120	M32	13-20	120				
MVE 8000/1J-85C1	MVE 8000/12J-85C1	MVE 17750/6J-85C1																			T4	135	4G6	12-4c	120	M32	13-20	120				
MVE 9000/1J-85A0	MVE 9000/12J-85A0	MVE 19120/6J-85A0																			T4	135	4G6	12-4c	120	M32	13-20	120				
MVE 9000/1J-85B0	MVE 9000/12J-85B0	MVE 19120/6J-85B0	6.20	7.45	8.31	9.99	13.20	7.63	12.60	/	0.73	0.76	10.56	10.08					6.50	6.40	T4	135	4G6	12-4c	120	M32	13-20	120				
MVE 9000/1J-85C1	MVE 9000/12J-85C1	MVE 19120/6J-85C1																			T4	135	4G6	12-4c	120	M32	13-20	120				
MVE 8000/1J-86A0	MVE 8000/12J-86A0	MVE 17750/6J-86A0	4.60	5.50	6.17	7.38	9.00	5.20	10.00	/			7.20	8.00					6.00	6.20	T4	135	4G6	12-4c	120	M32	13-20	120				
MVE 8000/1J-86B0	MVE 8000/12J-86B0	MVE 17750/6J-86B0			0.00	0.00															T4	135	4G6	12-4c	120	M32	13-20	120				
MVE 9000/1J-86A0	MVE 9000/12J-86A0	MVE 19120/6J-86A0	4.60	5.50	6.17	7.38	9.00	5.20	10.00	/			7.20	8.00					6.00	6.20	T4	135	4G6	12-4c	120	M32	13-20	120				
MVE 9000/1J-86B0	MVE 9000/12J-86B0	MVE 19120/6J-86B0																			T4	135	4G6	12-4c	120	M32	13-20	120				
MVE 9800/1J-86C1	MVE 9800/12J-86C1	MVE 21600/6J-86C1	4.60	5.50	6.17	7.38	9.00	5.20	10.00	/			7.20	8.00					6.00	6.20	T4	135	4G6	12-4c	120	M32	13-20	120				
MVE 11200/1J-86C1	MVE 11200/12J-86C1	MVE 24700/6J-86C1	5.20	6.10	6.97	8.18	10.00	5.78	10.00	/			8.00	8.00					6.70	7.20	T4	135	4G6	12-4c	120	M32	13-20	120				
MVE 8000/1J-86C0	MVE 8000/12J-86C0	MVE 17750/6J-86C0	4.60	5.50	6.17	7.38	9.00	5.20	10.00	/			7.20	8.00					5.90	6.20	T4	135	4G6	12-4c	120	M32	13-20	120				
MVE 9000/1J-86C0	MVE 9000/12J-86C0	MVE 19120/6J-86C0	4.60	5.50	6.17	7.38	9.00	5.20	10.00	/			7.20	8.00					5.90	6.20	T4	135	4G6	12-4c	120	M32	13-20	120				
MVE 10000/1J-90A0	MVE 10000/12J-90A0	MVE 21400/6J-90A0	6.10	6.40	8.18	8.58	14.00	8.09	12.70	/	0.64	0.66	11.20	10.16					6.60	6.60	T4	135	4G6	12-4c	120	M32	13-20	120				
MVE 10000/1J-90B0	MVE 10000/12J-90B0	MVE 21400/6J-90B0																			T4	135	4G6	12-4c	120	M32	13-20	120				
MVE 13000/1J-90A0	MVE 13000/12J-90A0	MVE 28660/6J-90A0	7.50	8.30	10.06	11.13	16.40	9.48	16.00	/	0.72	0.70	13.12	12.80					6.40	6.50	T4	135	4G6	12-4c	120	M32	13-20	120				
MVE 13000/1J-90B0	MVE 13000/12J-90B0	MVE 28660/6J-90B0																			T4	135	4G6	12-4c	120	M32	13-20	120				
MVE 10000/1J-91A0	MVE 10000/12J-91A0	MVE 21400/6J-91A0	6.40	7.70	8.58	10.33	13.00	7.51	14.50	/			10.40	11.60					6.00	6.00	T4	135	4G6	12-4c	120	M32	13-20	120				
MVE 10000/1J-91B0	MVE 10000/12J-91B0	MVE 21400/6J-91B0																			T4	135	4G6	12-4c	120	M32	13-20	120				
MVE 11400/1J-91A0	MVE 11400/12J-91A0	MVE 25100/6J-91A0	6.40	7.70	8.58	10.33	13.00	7.51	14.5	/			10.40	6.00					6.00	6.00	T4	135	4G6	12-4c	120	M32	13-20	120				
MVE 11400/1J-91B0	MVE 11400/12J-91B0	MVE 25100/6J-91B0																			T4	135	4G6	12-4c	120	M32	13-20	120				
MVE 13000/1J-91A0	MVE 13000/12J-91A0	MVE 28660/6J-91A0	8.00	8.90	10.73	11.94	17.20	9.94	18.10	/			13.76	14.48					5.60	6.30	T4	135	4G6	12-4c	120	M32	13-20	120				
MVE 13000/1J-91B0	MVE 13000/12J-91B0	MVE 28660/6J-91B0																			T4	135	4G6	12-4c	120	M32	13-20	120				

(*) Certification level.
(**) Working moment = 2 x static moment.
(***) Working moment = 2 x static moment.

Dimension with coarse degree of accurancy related to UNI 22768/1
Rights reserved to modify technical specifications.

Type 50 Hz	Type 60 Hz	For U.S. Market	Electric Feaures																									
			power				Current (A max)								Power Factor		Ia/In		-20°C to 40°C		Cable Type			Cable gland		
			Kw		Hp		Winding 230/400				Winding 290/500								ClassII Div.2	II 2D	IEC type	U.S. Market Type: AWG (SOW)	Class temp. °C	IEC type	Clamp. cable Ø	Class temp. °C
			50 hz	60 hz	50 hz	60 hz	230V (Δ)	400V (Y)	230V (Δ)	460V (Y)	290V (Δ)	500V (Y)	330V (Δ)	575V (Y)	50Hz	60Hz	50Hz	60Hz	Temp. Class	Temp. Class						
							50Hz		60Hz		50Hz		60Hz						T	(°C)					mm	
MVE 150/075J-40A0	MVE 150/090J-40A0	MVE 330/8J-40A	0.23	0.25	0.31	0.34	1.97	1.14	2.28	1.14	1.58	0.91	1.58	0.91	0.29	0.37	1.7	1.7	T4	135	4G2.5	16-4c	120	M20	7-13	120
MVE 150/075J-40AX	MVE 150/090J-40AX	MVE 330/8J-40AX																	T4	135	4G2.5	16-4c	120	M20	7-13	120
MVE 250/075J-50A0	MVE 250/090J-50A0	MVE 550/8J-50A	0.25	0.30	0.34	0.40	1.56	0.90	1.78	0.89	1.25	0.72	1.23	0.71	0.41	0.45	1.9	1.9	T4	135	4G2.5	16-4c	120	M20	7-13	120
MVE 250/075J-50C0	MVE 250/090J-50C0	MVE 550/8J-50C0																	T4	135	4G2.5	16-4c	120	M20	7-13	120
MVE 400/075J-50A0	MVE 400/090J-50A0	MVE 880/8J-50A0	0.25	0.30	0.34	0.40	1.56	0.90	1.78	0.89	1.25	0.72	1.23	0.71	0.41	0.45	2.1	2.1	T4	135	4G2.5	16-4c	120	M20	7-13	120
MVE 400/075J-50C0	MVE 400/090J-50C0	MVE 880/8J-50C0																	T4	135	4G2.5	16-4c	120	M20	7-13	120
MVE 650/075J-60A0	MVE 650/090J-60A0	MVE 1430/8J-60A0	0.37	0.45	0.50	0.60	2.08	1.20	2.40	1.20	1.66	0.96	1.66	0.96	0.56	0.62	2.4	2.4	T4	135	4G4	14-4c	120	M25	10-16	120
MVE 650/075J-60C0	MVE 650/090J-60C0	MVE 1430/8J-60C0																	T4	135	4G4	14-4c	120	M25	10-16	120
MVE 900/075J-60A0	MVE 900/090J-60A0	MVE 2000/8J-60A0	0.45	0.54	0.60	0.72	2.13	1.23	2.58	1.29	1.70	0.98	1.79	1.03	0.57	0.62	2.7	2.7	T4	135	4G4	14-4c	120	M25	10-16	120
MVE 900/075J-60C0	MVE 900/090J-60C0	MVE 2000/8J-60C0																	T4	135	4G4	14-4c	120	M25	10-16	120
MVE 1300/075J-70A0	MVE 1300/090J-70A0	MVE 2900/8J-70A0	0.75	0.90	1.01	1.21	3.81	2.20	4.40	2.20	3.04	1.76	3.04	1.76	0.69	0.72	3.2	3.2	T4	135	4G4	14-4c	120	M25	10-16	120
MVE 1300/075J-70B0	MVE 1300/090J-70B0	MVE 2900/8J-70B0																	T4	135	4G4	14-4c	120	M25	10-16	120
MVE 1300/075J-70C0	MVE 1300/090J-70C0	MVE 2900/8J-70C0																	T4	135	4G4	14-4c	120	M25	10-16	120
MVE 2100/075J-75A0	MVE 2100/090J-75A0	MVE 4620/8J-75A0	1.00	1.20	1.34	1.61	4.86	2.81	5.78	2.89	3.89	2.25	4.00	2.31	0.64	0.65	4.4	4.3	T4	135	4G6	12-4c	120	M32	13-20	120
MVE 2100/075J-75C0	MVE 2100/090J-75C0	MVE 4620/8J-75C0																	T4	135	4G6	12-4c	120	M32	13-20	120
MVE 2100/075J-75C1	MVE 2100/090J-75C1	MVE 4620/8J-75C1																	T4	135	4G6	12-4c	120	M32	13-20	120
MVE 3100/075J-80A0	MVE 3100/090J-80A0	MVE 6820/8J-80A0	2.00	2.30	2.68	3.08	7.79	4.50	8.80	4.40	6.23	3.60	6.09	3.52	0.68	0.73	4.2	4.2	T4	135	4G6	12-4c	120	M32	13-20	120
MVE 3800/075J-80A0	MVE 3800/090J-80A0	MVE 8360/8J-80A0	2.50	3.00	3.35	4.02	10.38	6.00	12.00	6.00	8.30	4.80	8.30	4.80	0.66	0.67	4.1	4.2	T4	135	4G6	12-4c	120	M32	13-20	120
MVE 3800/075J-80C0	MVE 3800/090J-80C0	MVE 8360/8J-80C0																	T4	135	4G6	12-4c	120	M32	13-20	120
MVE 4200/075J-80C0	MVE 4200/090J-80C0	MVE 9240/8J-80C0	2.90	3.40	3.89	4.56	12.37	7.15	13.00	6.50	9.90	5.72	9.00	5.20	0.69	0.71	4.0	3.9	T4	135	4G6	12-4c	120	M32	13-20	120
MVE 5300/075J-80C0	MVE 5300/090J-80C0	MVE 11660/8J-80C0	3.70	4.30	4.96	5.77	13.84	8.00	16.40	8.20	11.07	6.40	11.35	6.56	0.66	0.67	4.0	4.2	T4	135	4G6	12-4c	120	M32	13-20	120
MVE 4200/075J-85A0	MVE 4200/090J-85A0	MVE 9240/8J-85A0	2.90	3.40	3.89	4.56	11.25	6.50	13.00	6.50	9.00	5.20	9.00	5.20	0.69	0.71	4.0	3.9	T4	135	4G6	12-4c	120	M32	13-20	120
MVE 4200/075J-85B0	MVE 4200/090J-85B0	MVE 9240/8J-85B0																	T4	135	4G6	12-4c	120	M32	13-20	120
MVE 4200/075J-85C1	MVE 4200/090J-85C1	MVE 9240/8J-85C1																	T4	135	4G6	12-4c	120	M32	13-20	120
MVE 5300/075J-85A0	MVE 5300/090J-85A0	MVE 11660/8J-85A0	3.70	4.30	4.96	5.77	13.84	8.00	16.40	8.20	11.07	6.40	11.35	6.56	0.72	0.76	4.0	4.4	T4	135	4G6	12-4c	120	M32	13-20	120
MVE 5300/075J-85B0	MVE 5300/090J-85B0	MVE 11660/8J-85B0																	T4	135	4G6	12-4c	120	M32	13-20	120
MVE 5300/075J-85C1	MVE 5300/090J-85C1	MVE 11660/8J-85C1																	T4	135	4G6	12-4c	120	M32	13-20	120
MVE 6500/075J-85A0	MVE 6500/090J-85A0	MVE 14300/8J-85A0	3.80	4.20	5.10	5.63	15.19	8.78	16.60	8.30	12.15	7.02	11.49	6.64	0.75	0.78	3.8	4.2	T4	135	4G6	12-4c	120	M32	13-20	120
MVE 6500/075J-85B0	MVE 6500/090J-85B0	MVE 14300/8J-85B0																	T4	135	4G6	12-4c	120	M32	13-20	120
MVE 6500/075J-85C1	MVE 6500/090J-85C1	MVE 14300/8J-85C1																	T4	135	4G6	12-4c	120	M32	13-20	120
MVE 5300/075J-86C0	MVE 5300/090J-86C0	MVE 11660/8J-86C0	3.90	4.70	5.23	6.30	14.36	8.30	16.60	8.30	11.49	6.64	11.49	6.64			3.7	3.7	T4	135	4G6	12-4c	120	M32	13-20	120
MVE 6500/075J-86C0	MVE 6500/090J-86C0	MVE 14300/8J-86C0	3.90	4.70	5.23	6.30	14.36	8.30	16.60	8.30	11.49	6.64	11.49	6.64			4.2	4.2	T4	135	4G6	12-4c	120	M32	13-20	120
							Winding 400/690				Winding 500															
							400V (Δ)	690V (Y)	460V (Δ)	/	500V (Δ)	575V (Δ)														
							50Hz		60Hz		50Hz	60Hz														
MVE 10000/075J-90A0	MVE 10000/090J-90A0	MVE 22000/8J-90A0	6.80	7.50	9.12	10.06	13.50	7.80	12.50	/	10.80	10.00			0.74	0.75	3.7	4.4	T4	135	4G6	12-4c	120	M32	13-20	120
MVE 10000/075J-90B0	MVE 10000/090J-90B0	MVE 22000/8J-90B0																	T4	135	4G6	12-4c	120	M32	13-20	120
MVE 10000/075J-91A0	MVE 10000/090J-91A0	MVE 22000/8J-91A0	6.00	7.00	8.05	9.39	14.40	8.32	14.00	/	11.52	11.20					4.7	4.7	T4	135	4G6	12-4c	120	M32	13-20	120
MVE 10000/075J-91B0	MVE 10000/090J-91B0	MVE 22000/8J-91B0																	T4	135	4G6	12-4c	120	M32	13-20	120

(*) Certification level.
(**) Working moment = 2 x static moment.
(***) Custom footprint (available on request.

Dimension with coarse degree of accurancy related to UNI 22768/1
Rights reserved to modify technical specifications.

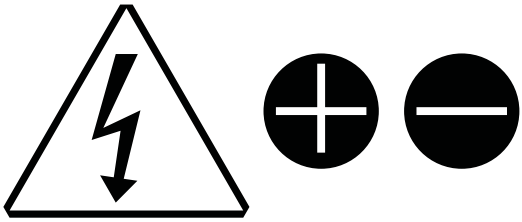

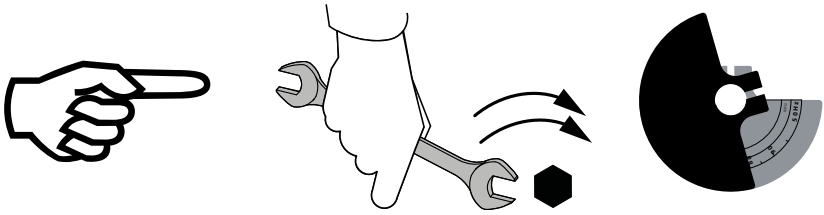

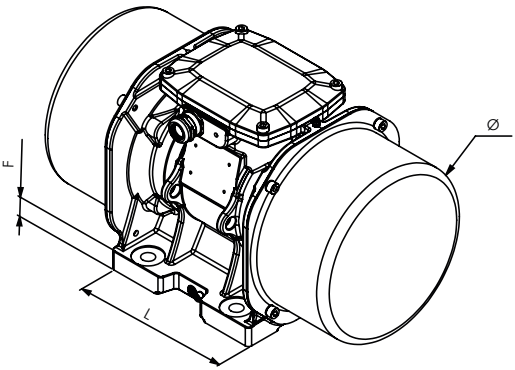
F
L
Ø

Type 50 Hz	Type 60 Hz	For U.S. Market	Mechanical features																	
			Working moment (**)				FC				TYPE	Bearings								
			Kg*cm		in*Lb		Kg		Lb			Bearings Life (h)						Grease (-----)		
												Fc 100%		Fc 80%		Fc 50%		Lube schedule	Lube replacement	
			50Hz	60Hz	50Hz	60Hz	50Hz	60Hz	50Hz	60Hz		50 Hz	60 Hz	50 Hz	60 Hz	50 Hz	60 Hz	Gr. Each bearing	Gr. Each bearing	
MVE 60/3*-10A0	MVE 60/36*-10A0	MVE 160/2*-10A0	1.31	0.98	1.14	0.85	66	71	146	157		>100000	84075	>100000	>100000	>100000	>100000	/	/	
MVE 100/3*-10A0	MVE 100/36*-10A0	MVE 220/2*-10A0	1.96	1.31	1.70	1.14	98	95	216	209		38366	35097	74933	68549	>100000	>100000	/	/	
MVE 200/3*-20A0	MVE 200/36*-20A0	MVE 440/2*-20A0	3.72	2.61	3.23	2.27	187	189	412	417		5522	4457	10785	8705	44176	35657	/	/	
MVE 200/3*-20AX	MVE 200/36*-20AX	MVE 440/2*-20AX																		
MVE 200/3*-23A0	MVE 200/36*-23A0	MVE 440/2*-23A0	3.72	2.61	3.23	2.27	187	189	412	417		5522	4457	10785	8705	44176	35657	/	/	
MVE 300/3*-30A0	MVE 300/36*-30A0	MVE 690/2*-30A0	6.39	4.46	5.55	3.87	321	323	708	712		3072	2513	6000	4907	24574	20101	/	/	
MVE 300/3*-30AX	MVE 300/36*-30AX	MVE 690/2*-30AX																		
MVE 400/3*-30A0	MVE 400/36*-30A0	MVE 890/2*-30A0	7.96	5.68	6.91	4.93	407	411	897	906		1507	1220	2943	2382	12056	9756	/	/	
MVE 400/3*-30AX	MVE 400/36*-30AX	MVE 890/2*-30AX																		
MVE 500/3*-40A0	MVE 500/36*-40A0	MVE 1200/2*-40A0	10.27	7.38	8.91	6.41	530	534	1168	1177		3733	3111	7291	6075	29862	24885	/	/	
MVE 500/3*-40AX	MVE 500/36*-40AX	MVE 1200/2*-40AX																		
MVE 700/3*-40A0	MVE 700/36*-40A0	MVE 1700/2*-40A0	14.90	10.57	12.93	9.18	758	765	1671	1687		1276	1034	2492	2020	10208	8275	/	/	
MVE 700/3*-40AX	MVE 700/36*-40AX	MVE 1700/2*-40AX																		
MVE 800/3*-50A0	MVE 800/36*-50A0	MVE 1800/2*-50A0	15.68	11.06	13.61	9.60	794	800	1750	1764		1110	904	2168	1767	8881	7236	/	/	
MVE 800/3*-50C0	MVE 800/36*-50C0	MVE 1800/2*-50C0																		
MVE 1200/3*-50A0	MVE 1200/36*-50A0	MVE 2300/2*-50A0	20.26	14.00	17.59	12.15	1005	1013	2216	2233		547	445	1069	870	4380	3564	/	/	
MVE 1200/3*-50C0	MVE 1200/36*-50C0	MVE 2300/2*-50C0																		
MVE 1300/3*-50A0	MVE 1300/36*-50A0	MVE 3100/2*-50A0	26.58	18.60	23.07	16.15	1355	1365	2987	3009		3262	2653	6863	5581	32881	26737	/	7	
MVE 1300/3*-51A0	MVE 1300/36*-51A0	MVE 3100/2*-51A0																		
MVE 1300/3*-50C0	MVE 1300/36*-50C0	MVE 3100/2*-50C0																		
MVE 1150/3*-60C0	MVE 1150/36*-60C0	MVE 2500/2*-60C0	22.22	16.69	19.29	14.49	1117	1208	2463	2663		86678	55635	>100000	>100000	>100000	>100000	/	25	
MVE 1600/3*-60A0	MVE 1600/36*-60A0	MVE 3500/2*-60A0	31.26	22.22	27.14	19.29	1601	1608	3530	3545		26108	21443	54931	45115	>100000	>100000	/	25	
MVE 1600/3*-60C0	MVE 1600/36*-60C0	MVE 3500/2*-60C0																		
MVE 2000/3*-60A0	MVE 2000/36*-60A0	MVE 4100/2*-60A0	36.78	27.60	31.93	23.96	2027	1997	4469	4403		11892	10415	25019	21912	>100000	>100000	/	25	
MVE 2000/3*-60C0	MVE 2000/36*-60C0	MVE 4100/2*-60C0																		
MVE 2300/3*-60A0	MVE 2300/36*-60A0	MVE 5100/2*-60A0	45.97	31.87	39.90	27.66	2302	2306	5075	5084		7782	6447	16372	13565	78433	64984	/	25	
MVE 2300/3*-60C0	MVE 2300/36*-60C0	MVE 5100/2*-60C0																		
MVE 3200/3*-75A1	MVE 3200/36*-75A1	MVE 7600/2*-75A1	68.10	43.89	59.11	38.10	3252	3176	7169	7002		17401	15690	36611	33011	>100000	>100000	5.5	36	
MVE 3200/3*-75C0	MVE 3200/36*-75C0	MVE 7600/2*-75C0																		
MVE 3200/3*-75C1	MVE 3200/36*-75C1	MVE 7600/2*-75C1																		
MVE 4000/3*-75A1	MVE 4000/36*-75A1	MVE 8800/2*-75A1	79.40	55.99	68.92	48.60	4033	4052	8891	8933		8492	6966	17866	14657	85589	70216	5.5	36	
MVE 4000/3*-75C0	MVE 4000/36*-75C0	MVE 8800/2*-75C0																		
MVE 4000/3*-75C1	MVE 4000/36*-75C1	MVE 8800/2*-75C1																		
MVE 5000/3*-75A1	MVE 5000/36*-75A1	MVE 11500/2*-75A1	103.24	69.76	89.62	60.56	5009	5048	11043	11129		4123	3348	8675	7045	41560	33749	5.5	36	
MVE 5000/3*-75C0	MVE 5000/36*-75C0	MVE 11500/2*-75C0																		
MVE 5000/3*-75C1	MVE 5000/36*-75C1	MVE 11500/2*-75C1																		

(*) Certification level.
(**) Working moment = 2 x static moment.
(***) Custom footprint (available on request.

Dimension with coarse degree of accurancy related to UNI 22768/1
Rights reserved to modify technical specifications.

Type 50 Hz	Type 60 Hz	For U.S. Market	Mechanical features																	
			Working moment (**)				FC				TYPE	Bearings								
			Kg*cm		in*Lb		Kg		Lb			Bearings Life (h)						Grease (----)		
												Fc 100%		Fc 80%		Fc 50%		Lube schedule	Lube replacement	
			50Hz	60Hz	50Hz	60Hz	50Hz	60Hz	50Hz	60Hz		50 Hz	60 Hz	50 Hz	60 Hz	50 Hz	60 Hz	Gr. Each bearing	Gr. Each bearing	
MVE 6500/3*-85A0	MVE 6500/36*-85A0	MVE 14400/2*-85A0																		
MVE 6500/3*-85B0	MVE 6500/36*-85B0	MVE 14400/2*-85B0	129.55	90.54	112.46	78.59	6510	6552	14352	14445		8915	7272	18757	15299	89859	73294	9	60	
MVE 6500/3*-85C1	MVE 6500/36*-85C1	MVE 14400/2*-85C1																		
MVE 9000/3*-85A0	MVE 9000/36*-85A0	MVE 20100/2*-85A0																		
MVE 9000/3*-85B0	MVE 9000/36*-85B0	MVE 20100/2*-85B0	179.59	129.55	155.89	112.46	9025	9375	19897	20668		3001	2203	6314	4635	30246	22203	9	60	
MVE 9000/3*-85C1	MVE 9000/36*-85C1	MVE 20100/2*-85C1																		
MVE 6500/3*-86A0	MVE 6500/36*-86A0	MVE 14400/2*-86A0	129.55	90.54	112.46	78.59	6510	6552	14352	14445		16251	13256	34192	27889	>100000	>100000	10.5	70	
MVE 6500/3*-86B0	MVE 6500/36*-86B0	MVE 14400/2*-86B0																		
MVE 9000/3*-86A0	MVE 9000/36*-86A0	MVE 20100/2*-86A0																		
MVE 9000/3*-86B0	MVE 9000/36*-86B0	MVE 20100/2*-86B0	179.59	129.55	155.89	112.46	9025	9375	19897	20668		5470	4015	11509	8448	55136	40474	10.5	70	

(*) Certification level.
(**) Working moment = 2 x static moment.
(***) Working moment = 2 x static moment.

Dimension with coarse degree of accurancy related to UNI 22768/1

Rights reserved to modify technical specifications.

Type 50 Hz	Type 60 Hz	For U.S. Market	Mechanical features															
			Working moment (*)				FC				Bearings							
			Kg*cm		in*Lb		Kg		Lb		TYPE	Bearings Life (h)						
												Fc 100%		Fc 80%		Fc 50%	
			50Hz	60Hz	50Hz	60Hz	50Hz	60Hz	50Hz	60Hz		50 Hz	60 Hz	50 Hz	60 Hz	50 Hz	60 Hz
MVE 60/3*-10A0-M	MVE 60/36*-10A0-M	MVE 160/2*-10A0-M	1.31	0.98	1.14	0.85	66	71	145.50	156.5		>100000	84075	>100000	>100000	>100000	>100000
MVE 100/3*-10A0-M	MVE 100/36*-10A0-M	MVE 220/2*-10A0-M	1.96	1.31	1.70	1.14	98	95	216.05	209.4		38366	35097	74933	68549	>100000	>100000
MVE 200/3*-20A0-M	MVE 200/36*-20A0-M	MVE 440/2*-20A0-M	3.72	2.61	3.23	2.27	187	189	412.3	416.7		5522	4457	10785	8705	44176	35657
MVE 200/3*-20AX-M	MVE 200/36*-20AX-M	MVE 440/2*-20AX-M															
MVE 200/3*-23A0-M	MVE 200/36*-23A0-M	MVE 440/2*-23A0-M	3.72	2.61	3.23	2.27	187	189	412.3	416.7		5522	4457	10785	8705	44176	35657
MVE 300/3*-30A0-M	MVE 300/36*-30A0-M	MVE 690/2*-30A0-M	6.39	4.46	5.55	3.87	321	323	707.7	712.1		3072	2513	6000	4907	24574	20101
MVE 300/3*-30AX-M	MVE 300/36*-30AX-M	MVE 690/2*-30AX-M															

(*) Certification level.
(**) Working moment = 2 x static moment.
(***) Custom footprint (available on request.

Dimension with coarse degree of accurancy related to UNI 22768/1
Rights reserved to modify technical specifications.

Type 50 Hz	Type 60 Hz	For U.S. Market	Mechanical features																	
			Working moment (**)				FC				Bearings									
			Kg*cm		in*Lb		Kg		Lb		TYPE	Bearings Life (h)						Grease (------)	
												Fc 100%		Fc 80%		Fc50%		Lube schedule	Lube replacement
			50Hz	60Hz	50Hz	60Hz	50Hz	60Hz	50Hz	60Hz		50 Hz	60 Hz	50 Hz	60 Hz	50 Hz	60 Hz	Gr. Each bearing	Gr. Each bearing
MVE 40/15*-10A0	MVE 40/18*-10A0	MVE 70/4*-10A0	1.97	1.97	1.71	1.71	25.00	36.00	55.12	79.37		>100000	>100000	>100000	>100000	>100000	>100000	/	/
MVE 90/15*-20A0	MVE 90/18*-20A0	MVE 200/4*-20A0	5.97	4.20	5.18	3.65	75	76	165	168		>100000	>100000	>100000	>100000	>100000	>100000	/	/
MVE 90/15*-20AX	MVE 90/18*-20AX	MVE 200/4*-20AX																	
MVE 90/15*-23A0	MVE 90/18*-23A0	MVE 200/4*-23A0	5.97	4.20	5.18	3.65	75	76	165	168		>100000	>100000	>100000	>100000	>100000	>100000	/	/
MVE 200/15*-30A0	MVE 200/18*-30A0	MVE 400/4*-30A0	15.44	10.83	13.40	9.40	194	196	428	432		27831	22490	54358	43926	>100000	>100000	/	/
MVE 200/15*-30AX	MVE 200/18*-30AX	MVE 400/4*-30AX																	
MVE 400/15*-40A0	MVE 400/18*-40A0	MVE 860/4*-40A0	33.43	23.38	29.02	20.30	420	423	926	933		15002	12237	29300	23901	>100000	97898	/	/
MVE 400/15*-40AX	MVE 400/18*-40AX	MVE 860/4*-40AX																	
MVE 500/15*-40A0	MVE 500/18*-40A0	MVE 1150/4*-40AX	40.12	28.08	34.82	24.38	504	508	1111	1120		8681	7065	16956	13799	69452	56520	/	/
MVE 500/15*-40AX	MVE 500/18*-40AX	MVE 1150/4*-40AX																	
MVE 300/15*-50A0	MVE 300/18*-50A0	MVE 750/4*-50A0	26.58	18.60	23.07	16.15	334	336	736	741		29830	24417	58261	47689	>100000	>100000	/	/
MVE 300/15*-50C0	MVE 300/18*-50C0	MVE 750/4*-50C0																	
MVE 300/15*-51A0	MVE 300/18*-51A0	MVE 750/4*-51A0																	
MVE 700/15*-50A0	MVE 700/18*-50A0	MVE 1530/4*-50A0	56.83	39.36	49.33	34.16	714	712	1574	1570		3053	2566	5964	5012	24428	20528	/	/
MVE 700/15*-50C0	MVE 700/18*-50C0	MVE 1530/4*-50C0																	
MVE 710/15*-50A0	MVE 710/18*-50A0	MVE 1540/4*-50A0	56.83	39.36	49.33	34.16	714	712	1574	1570		55209	46440	116156	97706	>100000	>100000	/	11
MVE 710/15*-50C0	MVE 710/18*-50C0	MVE 1540/4*-50C0																	
MVE 950/15*-50A0	MVE 950/18*-50A0	MVE 2100/4*-50A0	75.59	52.91	65.62	45.93	950	957	2094	2110		21310	17329	44836	36460	>100000	>100000	/	11
MVE 950/15*-50C0	MVE 950/18*-50C0	MVE 2100/4*-50C0																	
MVE 1100/15*-50A0	MVE 1100/18*-50A0	MVE 2300/4*-50A0	88.67	62.02	76.97	53.84	1114	1122	2456	2474		12532	10198	26368	21456	>100000	>100000	/	11
MVE 1100/15*-50C0	MVE 1100/18*-50C0	MVE 2300/4*-50C0																	
MVE 1100/15*-51A0	MVE 1100/18*-51A0	MVE 2300/4*-51A0	87.69	61.38	76.12	53.28	1102	1110	2429	2447		12994	10570	27338	22239	>100000	>100000	/	11
MVE 1400/15*-60A0	MVE 1400/18*-60A0	MVE 3100/4*-60A0	108.57	76.72	94.25	66.60	1364	1388	3007	3060		29926	23530	62962	49505	>100000	>100000	/	20
MVE 1400/15*-60C0	MVE 1400/18*-60C0	MVE 3100/4*-60C0																	
MVE 1700/15*-60A0	MVE 1700/18*-60A0	MVE 3880/4*-60A0	137.31	91.98	119.19	79.84	1725	1664	3803	3668		40721	38261	85675	80499	>100000	>100000	/	20
MVE 1700/15*-60C0	MVE 1700/18*-60C0	MVE 3880/4*-60C0																	
MVE 2400/15*-60A0	MVE 2400/18*-60A0	MVE 5340/4*-60A0	187.69	137.36	162.93	119.24	2358	2485	5198	5478		14365	10050	30223	21145	>100000	>100000	/	20
MVE 2400/15*-60C0	MVE 2400/18*-60C0	MVE 5340/4*-60C0																	
MVE 2500/15*-70A0	MVE 2500/18*-70A0	MVE 5700/4*-70A0	203.53	135.65	176.68	117.75	2557	2454	5637	5410		22479	21484	47295	45202	>100000	>100000	5	35
MVE 2500/15*-70B0	MVE 2500/18*-70B0	MVE 5700/4*-70B0																	
MVE 2500/15*-70C0	MVE 2500/18*-70C0	MVE 5700/4*-70C0																	
MVE 3000/15*-70A0	MVE 3000/18*-70A0	MVE 6840/4*-70A0	248.66	169.75	215.85	147.35	3124	3071	6887	6770		11530	10173	24259	21403	>100000	>100000	5	35
MVE 3000/15*-70B0	MVE 3000/18*-70B0	MVE 6840/4*-70B0																	
MVE 3000/15*-70C0	MVE 3000/18*-70C0	MVE 6840/4*-70C0																	
MVE 3800/15*-75A0	MVE 3800/18*-75A0	MVE 8400/4*-75A0	306.69	204.74	266.22	177.73	3853	3704	8494	8166		19775	18794	41605	39542	>100000	>100000	8	52
MVE 3800/15*-75C0	MVE 3800/18*-75C0	MVE 8400/4*-75C0																	
MVE 3800/15*-75C1	MVE 3800/18*-75C1	MVE 8400/4*-75C1																	
MVE 4300/15*-75A0	MVE 4300/18*-75A0	MVE 9480/4*-75A0	343.22	240.95	297.94	209.16	4312	4359	9506	9610		13589	10922	28590	22979	>100000	>100000	8	52
MVE 4300/15*-75C0	MVE 4300/18*-75C0	MVE 9480/4*-75C0																	
MVE 4300/15*-75C1	MVE 4300/18*-75C1	MVE 9480/4*-75C1																	
MVE 3800/15*-80C0	MVE 3800/18*-80C0	MVE 12260/4*-80C0	305.00	213.50	264.76	185.33	3827	3864	8437	8519		40158	32409	84490	68186	>100000	>100000	12.5	83
MVE 5400/15*-80C0	MVE 5400/18*-80C0	MVE 11880/4*-80C0	415.50	305.00	360.68	264.76	5220	5518	11508	12165		14269	9882	30021	20791	>100000	99604		
MVE 5500/15*-80A0	MVE 5500/18*-80A0	MVE 12260/4*-80A0	437.39	303.74	379.68	263.66	5495	5495	12114	12114		31371	26143	66004	55003	>100000	>100000	15	100

(*) Certification level.
(**) Working moment = 2 x static moment.
(***) Working moment = 2 x static moment.

Dimension with coarse degree of accurancy related to UNI 22768/1
Rights reserved to modify technical specifications.

Type 50 Hz	Type 60 Hz	For U.S. Market	Mechanical features																	
			Working moment (**)				FC				Bearings									
			Kg*cm		in*Lb		Kg		Lb		TYPE	Bearings Life (h)						Grease (------)	
												Fc 100%		Fc 80%		Fc 50%		Lube schedule	Lube replacement
			50Hz	60Hz	50Hz	60Hz	50Hz	60Hz	50Hz	60Hz		50 Hz	60 Hz	50 Hz	60 Hz	50 Hz	60 Hz	Gr. Each bearing	Gr. Each bearing
MVE 7200/15*-85A0	MVE 7200/18*-85A0	MVE 15850/4*-85A0	576.76	397.32	500.66	344.90	7246	7188	15975	15847		12477	10680	26250	22469	>100000	>100000	15	100
MVE 7200/15*-85B0	MVE 7200/18*-85B0	MVE 15850/4*-85B0																	
MVE 7200/15*-85C1	MVE 7200/18*-85C1	MVE 15850/4*-85C1																	
MVE 9000/15*-85A0	MVE 9000/18*-85A0	MVE 19800/4*-85A0	717.97	498.76	623.24	432.95	9020	9023	19885	19892		6013	5005	12650	10530	60605	50448	15	100
MVE 9000/15*-85B0	MVE 9000/18*-85B0	MVE 19800/4*-85B0																	
MVE 9000/15*-85C1	MVE 9000/18*-85C1	MVE 19800/4*-85C1																	
MVE 7200/15*-86A0	MVE 7200/18*-86A0	MVE 15850/4*-86A0	579.95	406.00	503.43	352.43	7286	7345	16063	16193		22330	18115	46981	38112	>100000	>100000	16.5	110
MVE 7200/15*-86B0	MVE 7200/18*-86B0	MVE 15850/4*-86B0																	
MVE 7200/15*-86C0	MVE 7200/18*-86C0	MVE 15850/4*-86C0	579.95	406.00	503.43	352.43	7286	7345	16063	16193		22330	18115	46981	38112	>100000	>100000	16.5	110
MVE 7200/15*-86C1	MVE 7200/18*-86C1	MVE 15850/4*-86C1																	
MVE 9000/15*-86A0	MVE 9000/18*-86A0	MVE 19800/4*-86A0	724.82	506.99	629.18	440.10	9106	9172	20075	20221		10619	8639	22342	18176	>100000	87075	16.5	110
MVE 9000/15*-86B0	MVE 9000/18*-86B0	MVE 19800/4*-86B0																	
MVE 9000/15*-86C0	MVE 9000/18*-86C0	MVE 19800/4*-86C0	724.82	506.99	629.18	440.10	9106	9172	20075	20221		10619	8639	22342	18176	>100000	87075	16.5	110
MVE 9000/15*-86C1	MVE 9000/18*-86C1	MVE 19800/4*-86C1																	
MVE 10000/15*-90A0	MVE 10000/18*-90A0	MVE 21000/4*-90A0	800.11	588.30	694.54	510.68	10052	10643	22161	23464		7639	5262	16071	11070	76992	53035	16.5	110
MVE 10000/15*-90B0	MVE 10000/18*-90B0	MVE 21000/4*-90B0																	
MVE 10000/15*-91A0	MVE 10000/18*-91A0	MVE 21000/4*-91A0	835.69	581.34	725.43	504.63	10499	10517	23146	23186		24002	19887	50498	41842	>100000	>100000	24	160
MVE 10000/15*-91B0	MVE 10000/18*-91B0	MVE 21000/4*-91B0																	

(*) Certification level.
(**) Working moment = 2 x static moment.
(***) Custom footprint (available on request.

Dimension with coarse degree of accurancy related to UNI 22768/1
Rights reserved to modify technical specifications.

Type 50 Hz	Type 60 Hz	For U.S. Market	Mechanical features																	
			Working moment (*)				FC				TYPE	Bearings						Grease (------)		
			Kg*cm		in*Lb		Kg		Lb			Bearings Life (h)								
			50Hz	60Hz	50Hz	60Hz	50Hz	60Hz	50Hz	60Hz		Fc 100%		Fc 80%		Fc 50%		Lube schedule	Lube replacement
												50 Hz	60 Hz	50 Hz	60 Hz	50 Hz	60 Hz	Gr. Each bearing	Gr. Each bearing
MVE 50/1*-30A0	MVE 50/12*-30A0	MVE90/6*-30A0	9.49	6.59	8.24	5.72	53	53	117	117		>100000	>100000	>100000	>100000	>100000	>100000	/	/
MVE 50/1*-30AX	MVE 50/12*-30AX	MVE90/6*-30AX																	
MVE 100/1*-30A0	MVE 100/12*-30A0	MVE220/6*-30A0	18.80	13.18	16.32	11.44	105	106	231	234		>100000	>100000	>100000	>100000	>100000	>100000	/	/
MVE 100/1*-30AX	MVE 100/12*-30AX	MVE220/6*-30AX																	
MVE 200/1*-40A0	MVE 200/12*-40A0	MVE410/6*-40A0	33.49	23.38	29.07	20.30	187	188	412	414		>100000	>100000	>100000	>100000	>100000	>100000	/	/
MVE 200/1*-40AX	MVE 200/12*-40AX	MVE410/6*-40AX																	
MVE 300/1*-50A0	MVE 300/12*-50A0	MVE680/6*-50A0	56.93	39.85	49.42	34.59	318	320	701	705		51844	42398	>100000	82809	>100000	>100000	/	/
MVE 300/1*-50C0	MVE 300/12*-50C0	MVE 680/6*-50C0																	
MVE 500/1*-50A0	MVE 500/12*-50A0	MVE 1100/6*-50A0	91.88	64.32	79.76	55.83	513	517	1131	1140		12349	10291	24119	20099	98790	82325	/	/
MVE 500/1*-50C0	MVE 500/12*-50C0	MVE 1100/6*-50C0																	
MVE 510/1*-50A0	MVE 510/12*-50A0	MVE 1600/6*-50A0	91.88	91.88	79.76	79.76	513	739	1131	1629		>100000	61532	>100000	>100000	>100000	>100000	/	10
MVE 510/1*-50C0	MVE 510/12*-50C0	MVE 1600/6*-50C0																	
MVE 800/1*-60A0	MVE 800/12*-60A0	MVE 1730/6*-60A0	137.37	108.58	119.24	94.25	767	873	1691	1925		>100000	>100000	>100000	>100000	>100000	>100000	/	20
MVE 800/1*-60C0	MVE 800/12*-60C0	MVE 1730/6*-60C0																	
MVE 1100/1*-60A0	MVE 1100/12*-60A0	MVE 2350/6*-60A0	187.69	137.31	162.93	119.19	1048	1104	2310	2434		>100000	75702	>100000	>100000	>100000	>100000	/	20
MVE 1100/1*-60C0	MVE 1100/12*-60C0	MVE 2350/6*-60C0																	
MVE 1500/1*-60A0	MVE 1500/12*-60A0	MVE 3090/6*-60A0	284.76	196.51	247.19	170.58	1590	1580	3505	3483		26927	22916	56654	48215	>100000	>100000	/	20
MVE 1500/1*-60C0	MVE 1500/12*-60C0	MVE 3090/6*-60C0																	
MVE 1600/1*-70A0	MVE 1600/12*-70A0	MVE 3580/6*-70A0	299.63	203.47	260.09	176.62	1673	1636	3688	3607		42233	37918	88855	79777	>100000	>100000	5	24
MVE 1600/1*-70B0	MVE 1600/12*-70B0	MVE 3580/6*-70B0																	
MVE 1600/1*-70C0	MVE 1600/12*-70C0	MVE 3580/6*-70C0																	
MVE 2100/1*-70A0	MVE 2100/12*-70A0	MVE 4740/6*-70A0	373.05	248.74	323.83	215.92	2083	2000	4592	4409		20339	19410	42793	40837	>100000	>100000	5	24
MVE 2100/1*-70B0	MVE 2100/12*-70B0	MVE 4740/6*-70B0																	
MVE 2100/1*-70C0	MVE 2100/12*-70C0	MVE 4740/6*-70C0																	
MVE 2200/1*-70A0	MVE 2200/12*-70A0	MVE 4850/6*-70A0	400.99	275.23	348.08	238.92	2239	2213	4936	4879		15988	13852	33637	29144	>100000	>100000	5	24
MVE 2200/1*-70B0	MVE 2200/12*-70B0	MVE 4850/6*-70B0																	
MVE 2200/1*-70C0	MVE 2200/12*-70C0	MVE 4850/6*-70C0																	
MVE 2600/1*-75A0	MVE 2600/12*-75A0	MVE 5690/6*-75A0	467.44	306.70	405.76	266.23	2610	2466	5754	5437		>100000	>100000	>100000	>100000	>100000	>100000	8	52
MVE 2600/1*-75B0	MVE 2600/12*-75B0	MVE 5690/6*-75B0																	
MVE 2600/1*-75C0	MVE 2600/12*-75C0	MVE 5690/6*-75C1																	
MVE 3000/1*-75A0	MVE 3000/12*-75A0	MVE6620/6*-75A0	540.33	379.71	469.03	329.61	3017	3053	6651	6731		67032	53695	>100000	>100000	>100000	>100000	8	52
MVE 3000/1*-75B0	MVE 3000/12*-75B0	MVE 6620/6*-75B0																	
MVE 3000/1*-75C1	MVE 3000/12*-75C1	MVE 6620/6*-75C1																	
MVE 3700/1*-75A0	MVE 3700/12*-75A0	MVE 8160/6*-75A0	702.53	465.65	609.84	404.21	3797	3744	8371	8254		31146	27200	65529	57227	>100000	>100000	8	52
MVE 3700/1*-75B0	MVE 3700/12*-75B0	MVE 8160/6*-75B0																	
MVE 3700/1*-75C1	MVE 3700/12*-75C1	MVE 8160/6*-75C1																	
MVE 4700/1*-80C0	MVE 4700/12*-80C0	MVE 10380/6*-80C0	837.00	592.60	726.56	514.41	4674	4765	10304	10505		29792	24173	62681	50859	>100000	>100000	15	100
MVE 5200/1*-80C0	MVE 5200/12*-80C0	MVE 11590/6*-80C0	939.60	657.70	815.63	570.92	5237	5288	11545	11658		21173	17083	44574	35942	>100000	>100000	15	100
MVE 3800/1*-80A0	MVE 3800/12*-80A0	MVE 8450/6*-80A0	680.38	437.41	590.61	379.70	3799	3517	8375	7754		>100000	>100000	>100000	>100000	>100000	>100000	18	120
MVE 3800/1*-80C0	MVE 3800/12*-80C0	MVE 8450/6*-80C0	680.00	450.00	590.28	390.63	3797	3618	8371	7976		61838	60531	>100000	>100000	>100000	>100000	15	100

(*) Certification level.
(**) Working moment = 2 x static moment.
(***) Working moment = 2 x static moment.

Dimension with coarse degree of accurancy related to UNI 22768/1

Rights reserved to modify technical specifications.

Type 50 Hz	Type 60 Hz	For U.S. Market	Mechanical features																	
			Working moment (*)				FC				Bearings									
			Kg*cm		in*Lb		Kg		Lb			Bearings Life (h)						Grease (------)		
			50Hz	60Hz	50Hz	60Hz	50Hz	60Hz	50Hz	60Hz	TYPE (SKF)	Fc 100%		Fc 80%		Fc 50%		Lube schedule	Lube replacement	
												50 Hz	60 Hz	50 Hz	60 Hz	50 Hz	60 Hz	Gr. Each bearing	Gr. Each bearing	
MVE 4700/1*-80A0	MVE 4700/12*-80A0	MVE 10370/6*-80A0	838.34	584.17	727.73	507.09	4681	4697	10320	10355		80302	66161	>100000	>100000	>100000	>100000	18	120	
MVE 5200/1*-85A0	MVE 5200/12*-85A0	MVE 11500/6*-85A0	929.86	654.57	807.17	568.20	5192	5263	11446	11603		56851	45279	>100000	95264	>100000	>100000	18	120	
MVE 5200/1*-85B0	MVE 5200/12*-85B0	MVE 11500/6*-85B0																		
MVE 5200/1*-85C1	MVE 5200/12*-85C1	MVE 11500/6*-85C1																		
MVE 6500/1*-85A0	MVE 6500/12*-85A0	MVE 14360/6*-85A0	1165.19	823.96	1011.45	715.24	6506	6625	14343	14605		26800	21024	56386	44234	>100000	>100000	18	120	
MVE 6500/1*-85B0	MVE 6500/12*-85B0	MVE 14360/6*-85B0																		
MVE 6500/1*-85C1	MVE 6500/12*-85C1	MVE 14360/6*-85C1																		
MVE 8000/1*-85A0	MVE 8000/12*-85A0	MVE 17750/6*-85A0	1436	930	1247	807	8018	7476	17676	16482		13355	14053	28097	29567	>100000	>100000	18	120	
MVE 8000/1*-85B0	MVE 8000/12*-85B0	MVE 17750/6*-85B0																		
MVE 8000/1*-85C1	MVE 8000/12*-85C1	MVE 17750/6*-85C1																		
MVE 9000/1*-85A0	MVE 9000/12*-85A0	MVE 19120/6*-85A0	1600	1165	1389	1011	8936	9369	19700	20655		9305	6559	19577	13801	93787	66114	18	120	
MVE 9000/1*-85B0	MVE 9000/12*-85B0	MVE 19120/6*-85B0																		
MVE 9000/1*-85C1	MVE 9000/12*-85C1	MVE 19120/6*-85C1																		
MVE 8000/1*-86A0	MVE 8000/12*-86A0	MVE 17750/6*-86A0	1434	930	1245	807	8007	7476	17652	16482		24456	25617	51453	53897	>100000	>100000	20	135	
MVE 8000/1*-86B0	MVE 8000/12*-86B0	MVE 17750/6*-86B0																		
MVE 9000/1*-86A0	MVE 9000/12*-86A0	MVE 19120/6*-86A0	1598	1165	1387	1011	8923	9369	19672	20655		17044	12072	35860	25399	>100000	>100000	20	135	
MVE 9000/1*-86B0	MVE 9000/12*-86B0	MVE 19120/6*-86B0																		
MVE 9800/1*-86C1	MVE 9800/12*-86C1	MVE 21600/6*-86C1	1778	1209	1543	1049	9928	9717	21887	21422		11942	10690	25125	22492	>100000	>100000	20	135	
MVE 11200/1*-86C1	MVE 11200/12*-86C1	MVE 24700/6*-86C1	2022	1407	1755	1222	11290	11315	24890	24945		7780	6436	16368	13540	78415	64866			
MVE 6500/1*-86C0	MVE 6500/12*-86C0	MVE 14360/6*-86C0	1159	812	1006	704	6471	6525	14266	14385		18834	15266	39625	32118	>100000	>100000	18	120	
MVE 7200/1*-86C0	MVE 7200/12*-86C0	MVE 15800/6*-86C0	1304	899	1132	780	7281	7226	16052	15930		12712	10864	26744	22858	>100000	>100000			
MVE 8000/1*-86C0	MVE 8000/12*-86C0	MVE 17750/6*-86C0	1420	1000	1233	868	7929	8042	17480	17729		25267	20086	53160	42259	>100000	>100000	20	135	
MVE 9000/1*-86C0	MVE 9000/12*-86C0	MVE 19120/6*-86C0	1608	1159	1396	1006	8978	9319	19793	20545		16699	12289	35133	25856	>100000	>100000			
MVE 10000/1*-90A0	MVE 10000/12*-90A0	MVE 21400/6*-90A0	1788	1240	1552	1076	9986	9970	22015	21980		11712	9813	24642	20645	>100000	98904	20	135	
MVE 10000/1*-90B0	MVE 10000/12*-90B0	MVE 21400/6*-90B0																		
MVE 13000/1*-90A0	MVE 13000/12*-90A0	MVE 28660/6*-90A0	2330	1647	2022	1430	13009	13246	28680	29202		4851	3806	10205	8008	48891	38363	20	135	
MVE 13000/1*-90B0	MVE 13000/12*-90B0	MVE 28660/6*-90B0																		
MVE 10000/1*-91A0	MVE 10000/12*-91A0	MVE 21400/6*-91A0	1803	1240	1565	1076	10067	9970	22194	21980		41415	35644	87134	74994	>100000	>100000	34.5	230	
MVE 10000/1*-91B0	MVE 10000/12*-91B0	MVE 21400/6*-91B0																		
MVE 11400/1*-91A0	MVE 11400/12*-91A0	MVE 25100/6*-91A0	2057	1433	1786	1244	11485	11522	25320	25401		26692	22006	56159	46300	>100000	>100000	34.5	230	
MVE 11400/1*-91B0	MVE 11400/12*-91B0	MVE 25100/6*-91B0																		
MVE 13000/1*-91A0	MVE 13000/12*-91A0	MVE 28660/6*-91A0	2311	1647	2006	1430	12904	13246	28448	29202		18103	13826	38087	29089	>100000	>100000	34.5	230	
	MVE 13000/12*-91B0	MVE 28660/6*-91B0																		

(*) Certification level.
(**) Working moment = 2 x static moment.
(***) Custom footprint (available on request.

Dimension with coarse degree of accurancy related to UNI 22768/1
Rights reserved to modify technical specifications.

Type 50 Hz	Type 60 Hz	For U.S. Market	Mechanical features																	
			Working moment (*)				FC				Bearings									
			Kg*cm		in*Lb		Kg		Lb		TYPE	Bearings Life (h)						Grease (-----)	
												Fc 100%		Fc 80%		Fc 50%		Lube schedule	Lube replacement
			50Hz	60Hz	50Hz	60Hz	50Hz	60Hz	50Hz	60Hz		50 Hz	60 Hz	50 Hz	60 Hz	50 Hz	60 Hz	Gr. Each bearing	Gr. Each bearing
MVE 150/075*-40A0	MVE 150/090*-40A0	MVE 330/8*-40A	33.39		28.98		105	151	231	333		>100000	>100000	>100000	>100000	>100000	>100000	/	/
MVE 150/075*-40AX	MVE 150/090*-40AX	MVE 330/8*-40AX																	
MVE 250/075*-50A0	MVE 250/090*-50A0	MVE 550/8*-50A	56.93		49.42		179	257	395	567		>100000	>100000	>100000	>100000	>100000	>100000	/	/
MVE 250/075*-50C0	MVE 250/090*-50C0	MVE 550/8*-50C0																	
MVE 400/075*-50A0	MVE 400/090*-50A0	MVE 880/8*-50A0	84.02		72.93		264	380	582	838		>100000	33759	>100000	65935	>100000	>100000	/	/
MVE 400/075*-50C0	MVE 400/090*-50C0	MVE 880/8*-50C0																	
MVE 650/075*-60A0	MVE 650/090*-60A0	MVE 1430/8*-60A0	137.31		119.19		431	621	950	1369		>100000	>100000	>100000	>100000	>100000	>100000	/	20
MVE 650/075*-60C0	MVE 650/090*-60C0	MVE 1430/8*-60C0																	
MVE 900/075*-60A0	MVE 900/090*-60A0	MVE 2000/8*-60A0	187.72		162.95		589	849	1299	1872		>100000	>100000	>100000	>100000	>100000	>100000	/	20
MVE 900/075*-60C0	MVE 900/090*-60C0	MVE 2000/8*-60C0																	
MVE 1300/075*-70A0	MVE 1300/090*-70A0	MVE 2900/8*-70A0	299.60		260.07		941	1355	2075	2987		>100000	>100000	>100000	>100000	>100000	>100000	5	24
MVE 1300/075*-70B0	MVE 1300/090*-70B0	MVE 2900/8*-70B0																	
MVE 1300/075*-70C0	MVE 1300/090*-70C0	MVE 2900/8*-70C0																	
MVE 2100/075*-75A0	MVE 2100/090*-75A0	MVE 4620/8*-75A0	467.41		405.74		1468	2114	3236	4661		>100000	>100000	>100000	>100000	>100000	>100000	8	52
MVE 2100/075*-75C0	MVE 2100/090*-75C0	MVE 4620/8*-75C0																	
MVE 2100/075*-75C1	MVE 2100/090*-75C1	MVE 4620/8*-75C1																	
MVE 3100/075*-80A0	MVE 3100/090*-80A0	MVE 6820/8*-80A0	680.34		590.57		2137	3077	4711	6784		>100000	>100000	>100000	>100000	>100000	>100000	18	120
MVE 3800/075*-80A0	MVE 3800/090*-80A0	MVE 8360/8*-80A0	838.43		727.80		2633	3792	5805	8360		>100000	>100000	>100000	>100000	>100000	>100000	18	120
MVE 3800/075*-80C0	MVE 3800/090*-80C0	MVE 8360/8*-80C0	837,00		726,56		2629	3786	5796	8347		>100000	67222	>100000	>100000	>100000	>100000	15	100
MVE 4200/075*-80C0	MVE 4200/090*-80C0	MVE 9240/8*-80C0	939.60		815.63		2951	4250	6506	9370		>100000	47190	>100000	99285	>100000	>100000	15	100
MVE 5300/075*-80C0	MVE 5300/090*-80C0	MVE 11660/8*-80C0	1142.60		991.84		3589	5168	7912	11393		99483	24589	>100000	51734	>100000	>100000	15	100
MVE 4200/075*-85A0	MVE 4200/090*-85A0	MVE 9240/8*-85A0	929.74		807.07		2920	4205	6437	9270		>100000	>100000	>100000	>100000	>100000	>100000	18	120
MVE 4200/075*-85B0	MVE 4200/090*-85B0	MVE 9240/8*-85B0																	
MVE 4200/075*-85C1	MVE 4200/090*-85C1	MVE 9240/8*-85C1																	
MVE 5300/075*-85A0	MVE 5300/090*-85A0	MVE 11660/8*-85A0	1165.22		1011.48		3660	5270	8069	11618		>100000	60105	>100000	>100000	>100000	>100000	18	120
MVE 5300/075*-85B0	MVE 5300/090*-85B0	MVE 11660/8*-85B0																	
MVE 5300/075*-85C1	MVE 5300/090*-85C1	MVE 11660/8*-85C1																	
MVE 6500/075*-85A0	MVE 6500/090*-85A0	MVE 14300/8*-85A0	1435.85		1246.40		4510	6494	9943	14317		>100000	29962	>100000	63038	>100000	>100000	18	120
MVE 6500/075*-85B0	MVE 6500/090*-85B0	MVE 14300/8*-85B0																	
MVE 6500/075*-85C1	MVE 6500/090*-85C1	MVE 14300/8*-85C1																	
MVE 5300/075*-86C0	MVE 5300/090*-86C0	MVE 11660/8*-86C0	1159		1006		3640	5242	8025	11557		>100000	42228	>100000	88846	>100000	>100000	18	120
MVE 6500/075*-86C0	MVE 6500/090*-86C0	MVE 14300/8*-86C0	1420		1233		4460	6422	9833	14158		86828	21463	>100000	45157	>100000	>100000	18	120
MVE 10000/075*-90A0	MVE 10000/090*-90A0	MVE 22000/8*-90A0	2200		1910		6911	9952	15236	21940		53262	13162	>100000	27693	>100000	>100000	25.5	170
MVE 10000/075*-90B0	MVE 10000/090*-90B0	MVE 22000/8*-90B0																	
MVE 10000/075*-91A0	MVE 10000/090*-91A0	MVE 22000/8*-91A0	2311		2006		7258	10452	16001	23042		>100000	40605	>100000	85431	>100000	>100000	35	230
MVE 10000/075*-91B0	MVE 10000/090*-91B0	MVE 22000/8*-91B0																	

(*) Certification level.
(**) Working moment = 2 x static moment.
(***) Working moment = 2 x static moment.

Dimension with coarse degree of accurancy related to UNI 22768/1
Rights reserved to modify technical specifications.

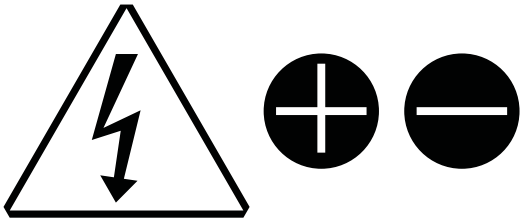

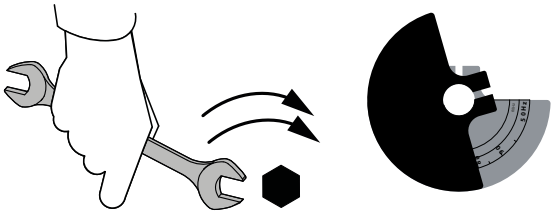

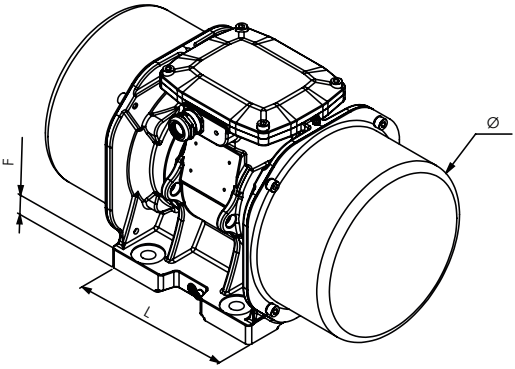
F
L
Ø

Type 50 Hz	Type 60 Hz	For U.S. Market	Dimensional Features																																				Clamping Torque	
			Drawing	Size	c				m				a		b		Ø g		Holes	d		e		f		h		i		l		n		weight				Screw	Washer			
					(mm)		(in)		(mm)		(in)																															
					50Hz	60Hz	50Hz	60Hz	50Hz	60Hz	50Hz	60Hz	(mm)	(in)	(mm)	(in)	(mm)	(in)	n°	(mm)	(in)	(mm)	(in)	(mm)	(in)	(mm)	(in)	(mm)	(in)	(mm)	(in)	(mm)	(in)	50Hz (Kg)	60Hz (Kg)	50Hz (Lb)	60Hz (Lb)	Metric	En-glish	Metric	English Flat Washer	(Nm)	(ft-lb)
MVE 60/3*-10A0	MVE 60/36*-10A0	MVE 160/2*-10A0	A1	10A0	213		8.4		45		1.8		62-74	2.44-2.91	106.0	4.2	9	0.4	4	130	5.1	135	5.3	11	0.4	50	2.0	96	3.8	107	4.2	85	3.3	4.2		9.3		M8	5/16"	8.4 x 16	5/16"	23	17
MVE 100/3*-10A0	MVE 100/36*-10A0	MVE 220/2*-10A0											33	1.3	83-102	3.27-4.02	7	0.3															5.0		11.0		M6	1/4"	6.4 x 12	1/4"	9	7
MVE 200/3*-20A0	MVE 200/36*-20A0	MVE 440/2*-20A0	B1	20A0	233		9.2		54		2.1		62-74	2.44-2.91	106	4.2	9	0.4	4	130	5.1	154	6.1	15	0.6	65	2.6	125	4.9	120	4.7	112	4.4	7.0		15.4		M8	5/16"	8.4 x 16	5/16"	23	17
MVE 200/3*-20AX	MVE 200/36*-20AX	MVE 440/2*-20AX		20AX									***	***	***	***	***	***	***	149	5.9													7.1		15.7		***	***	***	***	***	***
MVE 200/3*-23A0	MVE 200/36*-23A0	MVE 440/2*-23A0	F1	23A0	222.0		8.7		55.0		2.2		62-74	2.44-2.91	106.0	4.2	9.0	0.4	4	164	6.5	140	5.5	25.0	1.0	82	3.2	116	4.6	159	6.3	110	4.3	7.2				M8	5/16"	8.4 x 16	5/16"	23	17
													65	2.6	140.0	5.5	13.0	0.5																			M12	1/2"	13 x 24	1/2"	80	59
													115	4.5	135.0	5.3	11	0.4																			M10	3/8"	10.5 x 20	3/8"	45	33
													135	5.3	115.0	4.5	11	0.4																			M10	3/8"	10.5 x 20	3/8"	45	33
MVE 300/3*-30A0	MVE 300/36*-30A0	MVE 690/2*-30A0	C1	30A0	254		10.0		42		1.7		80	3.1	110	4.3	11	0.4	4	150	5.9	173	6.8	15.0	0.6	79	3.1	150	5.9	166	6.5	134	5.3	9.8		21.6		M10	3/8"	10.5 x 20	3/8"	45	33
													90	3.5	125	4.9	13	0.5																			M12	1/2"	13 x 24	1/2"	80	58
													124	4.9	110	4.3	11	0.4																			M10	3/8"	10.5 x 20	3/8"	45	33
													135	5.3	115	4.5	11	0.4																			M10	3/8"	10.5 x 20	3/8"	45	33
MVE 300/3*-30AX	MVE 300/36*-30AX	MVE 690/2*-30AX		30AX									***	***	***	***	***	***	***	175	6.9																	***	***	***	***	***	***
MVE 400/3*-30A0	MVE 400/36*-30A0	MVE 890/2*-30A0		30A0	274		10.8		52		2.0		80	3.1	110	4.3	11	0.4	4	150	5.9																	M10	3/8"	10.5 x 20	3/8"	45	33
													90	3.5	125	4.9	13	0.5																			M12	1/2"	13 x 24	1/2"	80	58
													124	4.9	110	4.3	11	0.4															10.3		22.7		M10	3/8"	10.5 x 20	3/8"	45	33
													135	5.3	115	4.5	11	0.4																			M10	3/8"	10.5 x 20	3/8"	45	33
MVE 400/3*-30AX	MVE 400/36*-30AX	MVE 890/2*-30AX		30AX									***	***	***	***	***	***	***	175	6.9																	***	***	***	***	***	***
MVE 500/3*-40A0	MVE 500/36*-40A0	MVE 1200/2*-40A0	D1	40A0	330.0		13.0		78		3.1		105	4.1	140	5.5	13	0.5	4	170	6.7	196	7.7	20	0.6	92	3.6	169	6.7	166	6.5	158	6.2	15.8		34.8		M12	1/2"	13 x 24	1/2"	80	58
MVE 500/3*-40AX	MVE 500/36*-40AX	MVE 1200/2*-40AX		40AX									***	***	***	***	***	***	***	190	7.5			15																		
MVE 700/3*-40A0	MVE 700/36*-40A0	MVE 1700/2*-40A0		40A0									105	4.1	140	5.5	13	0.5	4	170	6.7			20										16.5		36.4							
MVE 700/3*-40AX	MVE 700/36*-40AX	MVE 1700/2*-40AX		40AX									***	***	***	***	***	***	***	190	7.5			15																		
MVE 800/3*-50A0	MVE 800/36*-50A0	MVE 1800/2*-50A0		50A0	321		12.6		62		2.4		120	4.7	170	6.7	17	0.7	4	208	8.2	210	8.3	22	0.9	96	3.8	185	7.3	192	7.6	170	6.7	20.3		44.8		M16	5/8"	17 x 30	5/8"	185	137
MVE 800/3*-50C0	MVE 800/36*-50C0	MVE 1800/2*-50C0		50C0									140	5.5	170	6.7	17	0.7																								
MVE 1200/3*-50A0	MVE 1200/36*-50A0	MVE 2300/2*-50A0		50A0									120	4.7	170	6.7	17	0.7															21.3		47.0							
MVE 1200/3*-50C0	MVE 1200/36*-50C0	MVE 2300/2*-50C0	D1	50C0									140	5.5	170	6.7	17	0.7																								
MVE 1300/3*-50A0	MVE 1300/36*-50A0	MVE 3100/2*-50A0		50A0									120	4.7	170	6.7	17	0.7															21.7		47.8							
MVE 1300/3*-51A0	MVE 1300/36*-51A0	MVE 3100/2*-51A0		51A0	326		12,8		63		2,5		120	4.7	170	6.7	17	0.7				220	8.7	25	1.0	105	4.1	203	8.0			187	7.4										
MVE 1300/3*-50C0	MVE 1300/36*-50C0	MVE 3100/2*-50C0		50C0	321		12.6		62		2.4		140	5.5	170	6.7	17	0.7				210	8.3	22	0.9	96	3.8	185	7.3			170	6.7										
MVE 1150/3*-60C0	MVE 1150/36*-60C0	MVE 2500/2*-60C0		60C0									140	5.5	170	6.7	17	0.7																								
MVE 1600/3*-60A0	MVE 1600/36*-60A0	MVE 3500/2*-60A0		60A0									140	5.5	190	7.5	17	0.7															51	50	112	109						
MVE 1600/3*-60C0	MVE 1600/36*-60C0	MVE 3500/2*-60C0		60C0									140	5.5	170	6.7	17	0.7																								
MVE 2000/3*-60A0	MVE 2000/36*-60A0	MVE 4100/2*-60A0	D1	60A0	402		15.8		90		3.5		140	5.5	190	7.5	17	0.7	4	230	9.1	260	10.2	26	1.0	124	4.9	240	9.4	218	8.6	222	8.7	52	50	114	111	M16	5/8"	17 x 30	5/8"	185	137
MVE 2000/3*-60C0	MVE 2000/36*-60C0	MVE 4100/2*-60C0		60C0									140	5.5	170	6.7	17	0.7																								
MVE 2300/3*-60A0	MVE 2300/36*-60A0	MVE 5100/2*-60A0		60A0									140	5.5	190	7.5	17	0.7															53	51	116	112						
MVE 2300/3*-60C0	MVE 2300/36*-60C0	MVE 5100/2*-60C0		60C0									140	5.5	170	6.7	17	0.7																								
MVE 3200/3*-75A1	MVE 3200/36*-75A1	MVE 7600/2*-75A1	D1	75A1	516		20.3		117		4.6		155	6.1	255	10.0	25	1.0	4	304	12.0	314	12.4	30	1.2	147	5.8	285	11.2	277	10.9	265	10.4	103	101	227	224	M22	7/8"	23 x 39	7/8"	550	411
MVE 3200/3*-75C0	MVE 3200/36*-75C0	MVE 7600/2*-75C0	E1	75C0									83	3.3	230	9.1	22	0.9	6															103	101	227	224	M20	13/16"	21 x 37	13/16"	373	275
MVE 3200/3*-75C1	MVE 3200/36*-75C1	MVE 7600/2*-75C1		75C1									105	4.1	248	9.8	22	0.9	6															103	101	227	224	M20	13/16"	21 x 37	13/16"	373	275

(*) Certification level.
(**) Working moment = 2 x static moment.
(***) Working moment = 2 x static moment.

Dimension with coarse degree of accurancy related to UNI 22768/1
Rights reserved to modify technical specifications.

Type 50 Hz	Type 60 Hz	For U.S. Market	Drawing	Size	c (mm) 50Hz	c (mm) 60Hz	c (in) 50Hz	c (in) 60Hz	m (mm) 50Hz	m (mm) 60Hz	m (in) 50Hz	m (in) 60Hz	a (mm)	a (in)	b (mm)	b (in)	Øg (mm)	Øg (in)	Holes n°	d (mm)	d (in)	e (mm)	e (in)	f (mm)	f (in)	h (mm)	h (in)	i (mm)	i (in)	l (mm)	l (in)	n (mm)	n (in)	weight 50Hz (Kg)	weight 60Hz (Kg)	weight 50Hz (Lb)	weight 60Hz (Lb)	Screw Metric	Screw English	Washer Metric UNI 6592	Washer English Flat Washer	Clamping Torque (Nm)	Clamping Torque (ft-lb)
MVE 4000/3*-75A1	MVE 4000/36*-75A1	MVE 8800/2*-75A1	D1	75A1									155	6.1	255	10.0	25	1.0	4															107	104	236	229	M22	7/8"	23 x 39	7/8"	550	411
MVE 4000/3*-75C0	MVE 4000/36*-75C0	MVE 8800/2*-75C0	E1	75C0									83	3.3	230	9.1	22	0.9	6															107	104	236	229	M20	13/16"	21 x 37	13/16"	373	275
MVE 4000/3*-75C1	MVE 4000/36*-75C1	MVE 8800/2*-75C1		75C1									105	4.1	248	9.8	22	0.9	6															107	104	236	229	M20	13/16"	21 x 37	13/16"	373	275
MVE 5000/3*-75A1	MVE 5000/36*-75A1	MVE 11500/2*-75A1	D1	75A1									155	6.1	255	10.0	24	0.9	4															111	106	245	233	M22	7/8"	23 x 39	7/8"	550	411
MVE 5000/3*-75C0	MVE 5000/36*-75C0	MVE 11500/2*-75C0	E1	75C0	564	516	22.2	20.3	141	117	5.6	4.6	83	3.3	230	9.1	22	0.9	6															111	106	245	233	M20	13/16"	21 x 37	13/16"	373	275
MVE 5000/3*-75C1	MVE 5000/36*-75C1	MVE 11500/2*-75C1		75C1									105	4.1	248	9.8	24	0.9	6															111	106	245	233	M20	13/16"	21 x 37	13/16"	373	275
MVE 6500/3*-85A0	MVE 6500/36*-85A0	MVE 14400/2*-85A0	D1	85A0									200	7.9	320	12.6	28	1.1	4																			M27	1"	28 x 50	1"	873	645
MVE 6500/3*-85B0	MVE 6500/36*-85B0	MVE 14400/2*-85B0	E1	85B0									124	4.9	305	12.0	26	1.0	6															228	230	504	506	M24	7/8"	25 x 44	7/8"	696	513
MVE 6500/3*-85C1	MVE 6500/36*-85C1	MVE 14400/2*-85C1		85C1									118	4.6	280	11.0	26	1.0	6																								
MVE 9000/3*-85A0	MVE 9000/36*-85A0	MVE 20100/2*-85A0	D1	85A0									200	7.9	320	12.6	28	1.1	4																			M27	1"	28 x 50	1"	873	645
MVE 9000/3*-85B0	MVE 9000/36*-85B0	MVE 20100/2*-85B0	E1	85B0	624		24.6		130		5.1		124	4.9	305	12.0	26	1.0	6	385	15.2	402	15.8	40	1.6	203	8.0	394	15.5	360	14.2	378	14.9	240	235	530	517	M24	7/8"	25 x 44	7/8"	696	513
MVE 9000/3*-85C1	MVE 9000/36*-85C1	MVE 20100/2*-85C1		85C1									118	4.6	280	11.0	26	1.0	6																								
MVE 6500/3*-86A0	MVE 6500/36*-86A0	MVE 14400/2*-86A0	D1	86A0									200	7.9	320	12.6	28	1.1	4															228	230	504	506	M27	1"	28 x 50	1"	873	645
MVE 6500/3*-86B0	MVE 6500/36*-86B0	MVE 14400/2*-86B0	E1	86B0									124	4.9	305	12.0	26	1.0	6																			M24	7/8"	25 x 44	1"	696	513
MVE 9000/3*-86A0	MVE 9000/36*-86A0	MVE 20100/2*-86A0	D1	86A0									200	7.9	320	12.6	28	1.1	4															240	235	530	517	M27	1"	28 x 50	1"	873	645
MVE 9000/3*-86B0	MVE 9000/36*-86B0	MVE 20100/2*-86B0	E1	86B0									124	4.9	305	12.0	26	1.0	6																			M24	7/8"	25 x 44	1"	696	513

(*) Certification level.
(**) Working moment = 2 x static moment.
(***) Custom footprint (available on request.

Dimension with coarse degree of accurancy related to UNI 22768/1
Rights reserved to modify technical specifications.

MVE

E-H-J*

4 POLI
1500 rpm 50 Hz
1800 rpm 60 Hz

TAB. 177

Type 50 Hz	Type 60 Hz	For U.S. Market	Drawing	Size	c (mm) 50Hz	c (mm) 60Hz	c (in) 50Hz	c (in) 60Hz	m (mm) 50Hz	m (mm) 60Hz	m (in) 50Hz	m (in) 60Hz	a (mm)	a (in)	b (mm)	b (in)	Øg (mm)	Øg (in)	Holes n°	d (mm)	d (in)	e (mm)	e (in)	f (mm)	f (in)	h (mm)	h (in)	i (mm)	i (in)	l (mm)	l (in)	n (mm)	n (in)	weight 50Hz (Kg)	weight 60Hz (Kg)	weight 50Hz (Lb)	weight 60Hz (Lb)	Screw Metric	Screw English	Washer Metric UNI 6592	Washer English Flat Washer	Clamping Torque (Nm)	Clamping Torque (ft-lb)
MVE 40/15*-10A0	MVE 40/18*-10A0	MVE 70/4*-10A0	A1	10A0	213		8.4		45		1.8		62-74	2.44-2.91	106	4.2	9	0.4	4	130	5.1	135	5.3	11	0.4	50	2.0	96	3.8	107	4.2	85	3.3	4.6		10.14		M8	5/16"	8.4 x 16	5/16"	23	17
													33	1.3	83-102	3.27-4.02	7	0.3																									
MVE 90/15*-20A0	MVE 90/18*-20A0	MVE 200/4*-20A0	B1	20A0	233		9.2		54		2.1		62-74	2.44-2.91	106	4.2	9	0.4	4	130	5.1	154	6.1	15	0.6	65	2.6	125	4.9	120	4.7	112	4.4	7.4		16.31		M8	5/16"	8.4 x 16	5/16"	23	17
MVE 90/15*-20AX	MVE 90/18*-20AX	MVE 200/4*-20AX		20AX	233		9.2		54		2.1		***	***	***	***	***	***	***	149	5.9													7.4		16.31		***	***	***	***	***	***
MVE 90/15*-23A0	MVE 90/18*-23A0	MVE 200/4*-23A0	F1	23A0	222		8.7		55		2.2		62-74	2.44-2.91	106	4.2	9	0.4	4	164	6.5	140	5.5	25	1.0	82	3.2	116	4.6	159	6.3	110	4.3	7.2		15.9		M8	5/16"	8.4 x 16	5/16"	23	17
													65	2.6	140	5.5	13	0.5																				M12	1/2"	13 x 24	1/2"	80	59
													115	4.5	135	5.3	11	0.4																				M10	3/8"	10.5 x 20	3/8"	45	33
													135	5.3	115	4.5	11	0.4																				M10	3/8"	10.5 x 20	3/8"	45	33
MVE 200/15*-30A0	MVE 200/18*-30A0	MVE 400/4*-30A0	C1	30A0	274		10.8		52		2.0		80.0	3.1	110	4.3	11	0.4	4	150	5.9	173	6.8	15	0.6	79	3.1	150	5.9	166	6.5	134	5.3	11.8		26.01		M10	3/8"	10.5 x 20	3/8"	45	33
													90.0	3.5	125	4.9	13	0.5																				M12	1/2"	13 x 24	1/2"	80	58
													124.0	4.9	110	4.3	11	0.4																				M10	3/8"	10.5 x 20	3/8"	45	33
													135.0	5.3	115	4.5	11	0.4																				M10	3/8"	10.5 x 20	3/8"	45	33
MVE 200/15*-30AX	MVE 200/18*-30AX	MVE 400/4*-30AX		30AX	274		10.8		52		2.0		***	***	***	***	***	***	***	175	6.9																	***	***	***	***	***	***
MVE 400/15*-40A0	MVE 400/18*-40A0	MVE 860/4*-40A0	D1	40A0	330		13.0		78		3.1		105	4.1	140	5.5	13	0.5	4	170	6.7	196	7.7	20	0.8	92	3.6	174	6.9	166	6.5	160	6.3	19.5		42.99		M12	1/2"	13 x 24	1/2"	80	58
MVE 400/15*-40AX	MVE 400/18*-40AX	MVE 860/4*-40AX		40AX									***	***	***	***	***	***	***	190	7.5			15														***	***	***	***	***	***
MVE 500/15*-40A0	MVE 500/18*-40A0	MVE 1150/4*-40AX		40A0									105	4.1	140	5.5	13	0.5	4	170	6.7			20										21.0		46.30		M12	1/2"	13 x 24	1/2"	80	58
MVE 500/15*-40AX	MVE 500/18*-40AX	MVE 1150/4*-40AX		40AX									***	***	***	***	***	***	***	190	7.5			15														***	***	***	***	***	***
MVE 300/15*-50A0	MVE 300/18*-50A0	MVE 750/4*-50A0		50A0	321		12.6		62		2.4		120	4.7	170	6.7	17	0.7				210		22		96		185				170		22.0		48.50							
MVE 300/15*-50C0	MVE 300/18*-50C0	MVE 750/4*-50C0		50C0									140	5.5	170	6.7	17	0.7																									
MVE 300/15*-51A0	MVE 300/18*-51A0	MVE 750/4*-51A0		51A0	326		13		63		2		120	4.7	170	6.7	17	0.7				220		25		105		202				187											
MVE 700/15*-50A0	MVE 700/18*-50A0	MVE 1530/4*-50A0		50A0	391		15.4		97		3.8		120	4.7	170	6.7	17	0.7																27.0		59.52							
MVE 700/15*-50C0	MVE 700/18*-50C0	MVE 1530/4*-50C0		50C0									140	5.5	170	6.7	17	0.7																									
MVE 710/15*-50A0	MVE 710/18*-50A0	MVE 1540/4*-50A0	D1	50A0	391		15.4		97		3.8		120	4.7	170	6.7	17	0.7	4	208	8.2		8.3		0.9		3.8		7.3	192	7.6		6.7	27.0		59.52		M16	5/8"	17 x 30	5/8"	185	137
MVE 710/15*-50C0	MVE 710/18*-50C0	MVE 1540/4*-50C0		50C0									140	5.5	170	6.7	17	0.7																									
MVE 950/15*-50A0	MVE 950/18*-50A0	MVE 2100/4*-50A0		50A0	455		17.9		129		5.1		120	4.7	170	6.7	17	0.7				210		22		96		185				170		33.0		72.75							
MVE 950/15*-50C0	MVE 950/18*-50C0	MVE 2100/4*-50C0		50C0									120	4.7	170	6.7	17	0.7																									
MVE 1100/15*-50A0	MVE 1100/18*-50A0	MVE 2300/4*-50A0		50A0	455	391	17.9	15.4	129	97	5.1	3.8	120	4.7	170	6.7	17	0.7																35.5	26	78.26	57.32						
MVE 1100/15*-50C0	MVE 1100/18*-50C0	MVE 2300/4*-50C0		50C0									140	5.5	170	6.7	17	0.7																									
MVE 1100/15*-51A0	MVE 1100/18*-51A0	MVE 2300/4*-51A0	D1	51A0	414		16.3		106		4.2		120	4.7	170	6.7	17	0.7	4	208	8.2	220	8.7	25	1.0	105	4.1	202	8.0	192	7.6	187	7.4	48.0		105.82		M16	5/8"	17 x 30	5/8"	185	137
MVE 1400/15*-60A0	MVE 1400/18*-60A0	MVE 3100/4*-60A0		60A0	446		17.6		112		4.4		140	5.5	190	7.5	17	0.7																63.5	60	140	133.4						
MVE 1400/15*-60C0	MVE 1400/18*-60C0	MVE 3100/4*-60C0		60C0									140	5.5	170	6.7	17	0.7																									
MVE 1700/15*-60A0	MVE 1700/18*-60A0	MVE 3880/4*-60A0	D1	60A0									140	5.5	190	7.5	17	0.7	4	230	9.1	260	10.2	26	1.0	124	4.9	240	9.4	218	8.6	222	8.7	67.5	64.1	148.8	141.3	M16	5/8"	17 x 30	5/8"	185	137
MVE 1700/15*-60C0	MVE 1700/18*-60C0	MVE 3880/4*-60C0		60C0									140	5.5	170	6.7	17	0.7																									
MVE 2400/15*-60A0	MVE 2400/18*-60A0	MVE 5340/4*-60A0		60A0	490	446	19.3	17.6	134	112	5.3	4.4	140	5.5	190	7.5	17	0.7																68.0	64.6	149.9	142.4						
MVE 2400/15*-60C0	MVE 2400/18*-60C0	MVE 5340/4*-60C0		60C0									140	5.5	170	6.7	17	0.7																									

(*) Certification level.
(**) Working moment = 2 x static moment.
(***) Working moment = 2 x static moment.

Dimension with coarse degree of accurancy related to UNI 22768/1
Rights reserved to modify technical specifications.

MVE

E-H-J*

4 POLI

1500 rpm 50 Hz
1800 rpm 60 Hz

TAB. 178

Type 50 Hz	Type 60 Hz	For U.S. Market	Drawing	Size	c (mm) 50Hz	c (mm) 60Hz	c (in) 50Hz	c (in) 60Hz	m (mm) 50Hz	m (mm) 60Hz	m (in) 50Hz	m (in) 60Hz	a (mm)	a (in)	b (mm)	b (in)	Ø g (mm)	Ø g (in)	Holes n°	d (mm)	d (in)	e (mm)	e (in)	f (mm)	f (in)	h (mm)	h (in)	i (mm)	i (in)	l (mm)	l (in)	n (mm)	n (in)	weight 50Hz (Kg)	weight 60Hz (Kg)	weight 50Hz (Lb)	weight 60Hz (Lb)	Screw Metric	Screw English	Washer Metric UNI 6592	Washer English Flat Washer	Clamping Torque (Nm)	Clamping Torque (ft-lb)
MVE 2500/15*-70A0	MVE 2500/18*-70A0	MVE 5700/4*-70A0		70A0									155	6.1	225	8.9	22	0.9	4															80.4	74.4	177.3	164.0	M20	13/16"	21 x 37	13/16"	373	275
MVE 2500/15*-70B0	MVE 2500/18*-70B0	MVE 5700/4*-70B0		70B0	501		19.7		123		4.8		160	6.3	210	8.3	18	0.7	4															80.4	74.4	177.3	164.0	M16	5/8"	17 x 30	5/8"	185	137
MVE 2500/15*-70C0	MVE 2500/18*-70C0	MVE 5700/4*-70C0	D1	70C0									83	3.3	230	9.1	22	0.9	6	275	10.8	290	11.4	30	1.2	140	5.5	256	10.1	250	9.8	236	9.3	80.4	74.4	177.3	164.0	M20	13/16"	21 x 37	13/16"	373	275
MVE 3000/15*-70A0	MVE 3000/18*-70A0	MVE 6840/4*-70A0		70A0									155	6.1	225	8.9	22	0.9	4															80.4	74.4	177.3	164.0	M20	13/16"	21 x 37	13/16"	373	275
MVE 3000/15*-70B0	MVE 3000/18*-70B0	MVE 6840/4*-70B0		70B0	535	501	21.1	19.7	140	123	5.5	4.8	160	6.3	210	8.3	18	0.7	4															80.4	74.4	177.3	164.0	M16	5/8"	17 x 30	5/8"	185	137
MVE 3000/15*-70C0	MVE 3000/18*-70C0	MVE 6840/4*-70C0		70C0									83	3.3	230	9.1	22	0.9	6															80.4	74.4	177.3	164.0	M20	13/16"	21 x 37	13/16"	373	275
MVE 3800/15*-75A0	MVE 3800/18*-75A0	MVE 8400/4*-75A0	D1	75A0	564	516	22.2	20.3	141	117	5.9	4.6	155	6.1	255	10.0	24	0.9	4															125	113	275.6	249.1	M22	7/8"	23 x 39	7/8"	550	411
MVE 3800/15*-75C0	MVE 3800/18*-75C0	MVE 8400/4*-75C0	E1	75C0	564	536	22.2	21.1	151	117	5.9	4.6	83	3.3	230	9.1	22	0.9	6															125	113	275.6	249.1	M20	13/16"	21 x 37	13/16"	373	275
MVE 3800/15*-75C1	MVE 3800/18*-75C1	MVE 8400/4*-75C1	E1	75C1	564	536	22.2	21.1	151	117	5.9	4.6	105	4.1	248	9.8	22	0.9	6	304	12.0	314	12.4	30	1.2	147	5.8	285	11.2	277	10.9	265	10.4	125	113	275.6	249.1	M20	13/16"	21 x 37	13/16"	373	275
MVE 4300/15*-75A0	MVE 4300/18*-75A0	MVE 9480/4*-75A0	D1	75A0									155	6.1	255	10.0	24	0.9	4															135.5	124.8	298.7	275.1	M22	7/8"	23 x 39	7/8"	550	411
MVE 4300/15*-75C0	MVE 4300/18*-75C0	MVE 9480/4*-75C0	E1	75C0	584	564	23.0	22.2	151	141	5.9	5.6	83	3.3	230	9.1	22	0.9	6															135.5	124.8	298.7	275.1	M20	13/16"	21 x 37	13/16"	373	275
MVE 4300/15*-75C1	MVE 4300/18*-75C1	MVE 9480/4*-75C1	E1	75C1									105	4.1	248	9.8	22	0.9	6															135.5	124.8	298.7	275.1	M20	13/16"	21 x 37	13/16"	373	275
MVE 3800/15*-80C0	MVE 3800/18*-80C0	MVE 12260/4*-80C0	D1	80C0	556		21.9		123		4.8		105	4.1	248	9.8	22	0.9	6	300	11.8	335	13.2	30	1.2	163	6.4	305	12.0	298	11.7	284	11.2	108.0	108.0	238.1	238.1	M20	13/16"	21 x 37	13/16"	373	275
MVE 5400/15*-80C0	MVE 5400/18*-80C0	MVE 11880/4*-80C0			640	556	25.2	21.9	165	123	6.5	4.8																						120.0	108.0	264.6	238.1	M20	13/16"	21 x 37	13/16"	373	275
MVE 5500/15*-80A0	MVE 5500/18*-80A0	MVE 12260/4*-80A0	E1	80A0	603		23.7		143		5.6		180	7.1	280	11.0	26	1.0	4	332	13.1	354	13.9	32	1.3	170	6.7	330	13	312	12.3	311	12.2	181.0	169.0	399.0	372.6	M24	15/16"	25 x 44	15/16"	696	513
MVE 7200/15*-85A0	MVE 7200/18*-85A0	MVE 15850/4*-85A0	D1	85A0									200	7.9	320	12.6	28	1.1	4																			M27	1"	28 x 50	1"	873	645
MVE 7200/15*-85B0	MVE 7200/18*-85B0	MVE 15850/4*-85B0	E1	85B0	624		24.6		130		5.1		124	4.9	305	12.0	26	1.0	6															237	231	522	509	M24	7/8"	25 x 44	7/8"	696	513
MVE 7200/15*-85C1	MVE 7200/18*-85C1	MVE 15850/4*-85C1	E1	85C1									118	4.6	280	11.0	26	1.0	6																								
MVE 9000/15*-85A0	MVE 9000/18*-85A0	MVE 19800/4*-85A0	D1	85A0									200	7.9	320	12.6	28	1.1	4																			M27	1"	28 x 50	1"	873	645
MVE 9000/15*-85B0	MVE 9000/18*-85B0	MVE 19800/4*-85B0	E1	85B0	624		24.6		130 130		5.1		124	4.9	305	12.0	26	1.0	6															252	241	556	531	M24	7/8"	25 x 44	7/8"	696	513
MVE 9000/15*-85C1	MVE 9000/18*-85C1	MVE 19800/4*-85C1	E1	85C1									118	4.6	280	11.0	26	1.0	6																								
MVE 7200/15*-86A0	MVE 7200/18*-86A0	MVE 15850/4*-86A0	D1	86A0	624		24.6		130		5.1		200	7.9	320	12.6	28	1.1	4	385	15.2	402	15.8	40	1.6	203	8.0	394	15.5	360	14.2	378	14.9	237	231	522	509	M27	1"	28 x 50	1"	873	645
MVE 7200/15*-86B0	MVE 7200/18*-86B0	MVE 15850/4*-86B0	E1	86B0									124	4.9	305	12.0	26	1.0	6																			M24	7/8"	25 x 44	7/8"	696	513
MVE 7200/15*-86C0	MVE 7200/18*-86C0	MVE 15850/4*-86C0	D1	86C0	704		27.7		170		6.7		118	4.6	280	11.0	26	1.0	6															237	231	522	509	M27	1"	28 x 50	1"	873	645
MVE 7200/15*-86C1	MVE 7200/18*-86C1	MVE 15850/4*-86C1	E1	86C1	624		24.6		130		5.1		124	4.9	305	12.0	26	1.0	6																			M24	7/8"	25 x 44	7/8"	696	513
MVE 9000/15*-86A0	MVE 9000/18*-86A0	MVE 19800/4*-86A0	D1	86A0	624		24.6		130		5.1		200	7.9	320	12.6	28	1.1	4															252	241	556	531	M27	1"	28 x 50	1"	873	645
MVE 9000/15*-86B0	MVE 9000/18*-86B0	MVE 19800/4*-86B0	E1	86B0									124	4.9	305	12.0	26	1.0	6																			M24	7/8"	25 x 44	7/8"	696	513
MVE 9000/15*-86C0	MVE 9000/18*-86C0	MVE 19800/4*-86C0	D1	86C0	704		27.7		170		6.7		118	4.6	280	11.0	26	1.0	6															252	241	556	531	M27	1"	28 x 50	1"	873	645
MVE 9000/15*-86C1	MVE 9000/18*-86C1	MVE 19800/4*-86C1	E1	86C1	624		28.7		130		6.7		124	4.9	305	12.0	26	1.0	6																			M24	7/8"	25 x 44	7/8"	696	513
MVE 10000/15*-90A0	MVE 10000/18*-90A0	MVE 21000/4*-90A0	E1	90A0	728		28.7		170		6.7		125	4.9	380	15.0	39	1.5	6	452	17.8	415	16.3	40	1.6	205	8.1	394	15.5	380	15.0	378	14.9	300	286	661	631	M36	1-3/8"	37 x 66	1-3/8"	1864	1370
MVE 10000/15*-90B0	MVE 10000/18*-90B0	MVE 21000/4*-90B0		90B0									118	4.6	394	15.5	26	1.0																				M24	7/8"	25 x 44	7/8"	696	513
MVE 10000/15*-91A0	MVE 10000/18*-91A0	MVE 21000/4*-91A0	E1	91A0	728		28.7		170		6.7		125	4.9	380	15.0	39	1.5	6	452	17.8	415	16.3	40	1.6	205	8.1	394	15.5	380	15.0	378	14.9	300	286	661	631	M36	1-3/8"	37 x 66	1-3/8"	1864	1370
MVE 10000/15*-91B0	MVE 10000/18*-91B0	MVE 21000/4*-91B0		91B0									118	4.6	394	15.5	31	1.2																				M24	7/8"	25 x 44	7/8"	696	513

(*) Certification level.
(**) Working moment = 2 x static moment.
(***) Custom footprint (available on request.

Dimension with coarse degree of accurancy related to UNI 22768/1
Rights reserved to modify technical specifications.

OLI

MVE

E-H-J*

6 POLI

1000 rpm 50 Hz
1200 rpm 60 Hz

TAB. 179

Type 50 Hz	Type 60 Hz	For U.S. Market	Drawing	Size	c (mm) 50Hz	c (mm) 60Hz	c (in) 50Hz	c (in) 60Hz	m (mm) 50Hz	m (mm) 60Hz	m (in) 50Hz	m (in) 60Hz	a (mm)	a (in)	b (mm)	b (in)	Øg (mm)	Øg (in)	Holes n°	d (mm)	d (in)	e (mm)	e (in)	f (mm)	f (in)	h (mm)	h (in)	i (mm)	i (in)	l (mm)	l (in)	n (mm)	n (in)	weight 50Hz (Kg)	weight 60Hz (Kg)	weight 50Hz (Lb)	weight 60Hz (Lb)	Screw Metric	Screw English	Washer Metric UNI 6592	Washer English Flat Washer	Clamping Torque (Nm)	Clamping Torque (ft-lb)
MVE 50/1*-30A0	MVE 50/12*-30A0	MVE 90/6*-30A0	C1	30A0	274.0		10.8		52.0		2.0		80	3.1	110	4.3	11	0.4	4	150	5.9	173.0	6.8	15.0	0.6	79.0	3.1	150.0	5.9	166.0	6.5	134.0	5.3	10.4		22.9		M10	3/8"	10.5 x 20	3/8"	45	33
													90	3.5	125	4.9	13	0.5																				M12	1/2"	13 x 24	1/2"	80	58
													124	4.9	110	4.3	11	0.4																				M10	3/8"	10.5 x 20	3/8"	45	33
													135	5.3	115	4.5	11	0.4																				M10	3/8"	10.5 x 20	3/8"	45	33
MVE 50/1*-30AX	MVE 50/12*-30AX	MVE 90/6*-30AX		30AX									***	***	***	***	***	***	***	175	6.9																	***	***	***	***	***	***
MVE 100/1*-30A0	MVE 100/12*-30A0	MVE 220/6*-30A0		30A0	304.0		12.0		67.0		2.6		80	3.1	110	4.3	11	0.4		150	5.9													11.0		24.3		M10	3/8"	10.5 x 20	3/8"	45	33
													90	3.5	125	4.9	13	0.5																				M12	1/2"	13 x 24	1/2"	80	58
													124	4.9	110	4.3	11	0.4																				M10	3/8"	10.5 x 20	3/8"	45	33
													135	5.3	115	4.5	11	0.4																				M10	3/8"	10.5 x 20	3/8"	45	33
MVE 100/1*-30AX	MVE 100/12*-30AX	MVE 220/6*-30AX		30AX									***	***	***	***	***	***	***	175	6.9																	***	***	***	***	***	***
MVE 200/1*-40A0	MVE 200/12*-40A0	MVE 410/6*-40A0	D1	40A0	330.0		13.0		78.0		3.1		105	4.1	140	5.5	13	0.5	4	170	6.7	196	7.7	20	0.8	92	3.6	174	6.9	166	6.5	160	6.3	18.8		41.4		M12	1/2"	13 x 24	1/2"	80	58
MVE 200/1*-40AX	MVE 200/12*-40AX	MVE 410/6*-40AX		40AX									***	***	***	***	***	***	***	190	7.5			15																			
MVE 300/1*-50A0	MVE 300/12*-50A0	MVE 680/6*-50A0	D1	50A0	391.0		15.4		97.0		3.8		120	4.7	170	6.7	17	0.7	4	208	8.2	210.0	8.3	22.0	0.9	96.0	3.8	185.0	7.3	192.0	7.6	170.0	6.7	26.3		58.0		M16	5/8"	17 x 30	5/8"	185	137
MVE 300/1*-50C0	MVE 300/12*-50C0	MVE 680/6*-50C0		50C0									140	5.5	170	6.7	17	0.7																				M16	5/8"	17 x 30	5/8"	185	137
MVE 500/1*-50A0	MVE 500/12*-50A0	MVE 1100/6*-50A0		50A0	455.0		17.9		129.0		5.1		120	4.7	170	6.7	17	0.7																33.7		74.3		M16	5/8"	17 x 30	5/8"	185	137
MVE 500/1*-50C0	MVE 500/12*-50C0	MVE 1100/6*-50C0		50C0									140	5.5	170	6.7	17	0.7																				M16	5/8"	17 x 30	5/8"	185	137
MVE 510/1*-50A0	MVE 510/12*-50A0	MVE 1600/6*-50A0		50A0	455.0		17.9		129.0		5.1		120	4.7	170	6.7	17	0.7																34.1		75.2		M16	5/8"	17 x 30	5/8"	185	137
MVE 510/1*-50C0	MVE 510/12*-50C0	MVE 1600/6*-50C0		50C0									140	5.5	170	6.7	17	0.7																				M16	5/8"	17 x 30	5/8"	185	137
MVE 800/1*-60A0	MVE 800/12*-60A0	MVE 1730/6*-60A0	D1	60A0	446.0		17.6		112.0		4.4		140	5.5	190	7.5	17	0.7	4	230	9.1 0.0	260.0	10.2 0.0	26.0	1.0 0.0	124.0	4.9 0.0	240.0	9.4 0.0	218.0	8.6 0.0	222.0	8.7 0.0	60.4	58.0	133.2	127.9	M16	5/8"	17 x 30	5/8"	185	137
MVE 800/1*-60C0	MVE 800/12*-60C0	MVE 1730/6*-60C0		60C0									140	5.5	170	6.7	17	0.7																									
MVE 1100/1*-60A0	MVE 1100/12*-60A0	MVE 2350/6*-60A0		60A0	490	446	19.3	17.6	134	112	5.3	4.4	140	5.5	190	7.5	17	0.7																78.0	71.6	172.0	157.9						
MVE 1100/1*-60C0	MVE 1100/12*-60C0	MVE 2350/6*-60C0		60C0									140	5.5	170	6.7	17	0.7																									
MVE 1500/1*-60A0	MVE 1500/12*-60A0	MVE 3090/6*-60A0		60A0	566	490.0	22.3	19.3	172	134	6.8	5.3	140	5.5	190	7.5	17	0.7																84.0	73.0	185.2	160.9						
MVE 1500/1*-60C0	MVE 1500/12*-60C0	MVE 3090/6*-60C0		60C0									140	5.5	170	6.7	17	0.7																									
MVE 1600/1*-70A0	MVE 1600/12*-70A0	MVE 3580/6*-70A0	D1	70A0	563	501	22.2	19.7	154	123	6.1	4.8	155	6.1	225	8.9	22	0.9	4	275	10.8	290.0	11.4	30.0	1.2	140.0	5.5	256.0	10.1	250.0	9.8	236.0	9.3	90.2	79.4	198.9	175.0	M20	13/16"	21 x 37	13/16"	373	275
MVE 1600/1*-70B0	MVE 1600/12*-70B0	MVE 3580/6*-70B0		70B0									160	6.3	210	8.3	17	0.7	4																			M16	5/8"	17 x 30	5/8"	185	137
MVE 1600/1*-70C0	MVE 1600/12*-70C0	MVE 3580/6*-70C0		70C0									86	3.4	230	9.1	22	0.9	6																			M20	13/16"	21 x 37	13/16"	373	275
MVE 2100/1*-70A0	MVE 2100/12*-70A0	MVE 4740/6*-70A0		70A0	623	563	24.5	22.2	184	154	7.2	6.1	155	6.1	225	8.9	22	0.9	4															104.7	90.9	230.8	200.4	M20	13/16"	21 x 37	13/16"	373	275
MVE 2100/1*-70B0	MVE 2100/12*-70B0	MVE 4740/6*-70B0		70B0									160	6.3	210	8.3	17	0.7	4																			M16	5/8"	17 x 30	5/8"	185	137
MVE 2100/1*-70C0	MVE 2100/12*-70C0	MVE 4740/6*-70C0		70C0									86	3.4	230	9.1	22	0.9	6																			M20	13/16"	21 x 37	13/16"	373	275
MVE 2200/1*-70A0	MVE 2200/12*-70A0	MVE 4850/6*-70A0		70A0	623		24.5		184		7.2		155	6.1	225	8.9	22	0.9	4															106.5	93.0	234.8	205.0	M20	13/16"	21 x 37	13/16"	373	275
MVE 2200/1*-70B0	MVE 2200/12*-70B0	MVE 4850/6*-70B0		70B0									160	6.3	210	8.3	17	0.7	4																			M16	5/8"	17 x 30	5/8"	185	137
MVE 2200/1*-70C0	MVE 2200/12*-70C0	MVE 4850/6*-70C0		70C0									86	3.4	230	9.1	22	0.9	6																			M20	13/16"	21 x 37	13/16"	373	275
MVE 2600/1*-75A0	MVE 2600/12*-75A0	MVE 5690/6*-75A0	D1	75A0	692	584	27.2	23.0	205	151	8.1	5.9	155	6.1	255	10.0	23.5	0.9	4	304	12.0	314.0	12.4	30.0	1.2	147.0	5.8	285.0	11.2	277.0	10.9	265.0	10.4	146.5	126.5	323	279	M22	7/8"	23 x 39	7/8"	550	411
MVE 2600/1*-75C0	MVE 2600/12*-75C0	MVE 5690/6*-75C0	E1	75C0									83	3.3	230	9.1	22	0.9	6																			M20	13/16"	21 x 37	13/16"	373	275
MVE 2600/1*-75C1	MVE 2600/12*-75C1	MVE 5690/6*-75C1	E1	75C1									105	4.1	248	9.8	22	0.9	6																			M20	13/16"	21 x 37	13/16"	373	275
MVE 3000/1*-75A0	MVE 3000/12*-75A0	MVE 6620/6*-75A0	D1	75A0	692	584	27.2	23.0	205	151	8.1	5.9	155	6.1	255	10.0	23.5	0.9	4															155	137.8	341	303.8	M22	7/8"	23 x 39	7/8"	550	411
MVE 3000/1*-75C0	MVE 3000/12*-75C0	MVE 6620/6*-75C0	E1	75C0									83	3.3	230	9.1	22	0.9	6																			M20	13/16"	21 x 37	13/16"	373	275
MVE 3000/1*-75C1	MVE 3000/12*-75C1	MVE 6620/6*-75C1	E1	75C1									105	4.1	248	9.8	22	0.9	6																			M20	13/16"	21 x 37	13/16"	373	275
MVE 3700/1*-75A0	MVE 3700/12*-75A0	MVE 8160/6*-75A0	D1	75A0	734	692	28.9	27.2	226	205	8.9	8.1	155	6.1	255	10.0	23.5	0.9	4															159	142.0	350.5	313.1	M22	7/8"	23 x 39	7/8"	550	411
MVE 3700/1*-75C0	MVE 3700/12*-75C0	MVE 8160/6*-75C0	E1	75C0									83	3.3	230	9.1	22	0.9	6																			M20	13/16"	21 x 37	13/16"	373	275
MVE 3700/1*-75C1	MVE 3700/12*-75C1	MVE 8160/6*-75C1	E1	75C1									105	4.1	248	9.8	22	0.9	6																			M20	13/16"	21 x 37	13/16"	373	275
MVE 4700/1*-80C0	MVE 4700/12*-80C0	MVE 10380/6*-80C0	E1	80C0	794		31.3		242		9.5		105	4.1	248	9.8	22	0.9	6	300	12	335	13	30	1	163	6	305	12	298	12	284	11	210.7	186.0	342.6	410.1	M20	13/16"	21 x 37	13/16"	373	275
MVE 5200/1*-80C0	MVE 5200/12*-80C0	MVE 11500/6*-80C0		80C0	794		31.3		242		9.5																							220.0	193.0	464.5	425.5						
MVE 3800/1*-80A0	MVE 3800/12*-80A0	MVE 8450/6*-80A0	D1	80A0	683	603	26.9	23.7	183	143	7.2	5.6	180	7.1	280	11.0	26	1.0	4	332	13.1	354.0	13.9	32.0	1.3	170.0	6.7	330.0	13.0	312.0	12.3	311.0	12.2	215.6	194.8	475.3	429.5	M24	15/16"	25 x 44	15/16"	696	513
MVE 3800/1*-80C0	MVE 3800/12*-80C0	MVE 8450/6*-80C0	E1	80C0	794		31.3		242		9.5		105	4.1	248	9.8	22	0.9	6	300	11.8	335.0	13.2	30.0	1.2	163.0	6.4	305.0	12.0	298.0	11.7	284.0	11.2	217.0	196.0	478.4	432.1	M20	13/16"	21 x 37	13/16"	373	275
MVE 4700/1*-80A0	MVE 4700/12*-80A0	MVE 10370/6*-80A0	D1	80A0	733	683	28.9	26.9	208	183	8.2	7.2	180	7.1	280	11.0	26	1.0	4	332	13.1	354.0	13.9	32.0	1.3	170.0	6.7	330.0	13.0	312.0	12.3	311.0	12.2	219.8	201.4	484.6	444.0	M24	15/16"	25 x 44	15/16"	696	513
MVE 5200/1*-85A0	MVE 5200/12*-85A0	MVE 11500/6*-85A0	D1	85A0	704	624	27.7	24.6	170.0	130.0	6.7	5.1	200	7.9	320	12.6	28	1.1	4	385	15.2	402.0	15.8	40.0	1.6	203.0	8.0	394.0	15.5	360.0	14.2	378.0	14.9	263.8	248.2	581.6	547.2	M27	1"	28 x 50	1"	873	645
MVE 5200/1*-85B0	MVE 5200/12*-85B0	MVE 11500/6*-85B0	E1	85B0									124	4.9	305	12.0	26	1.0	6																			M24	7/8"	25 x 44	7/8"	696	513
MVE 5200/1*-85C1	MVE 5200/12*-85C1	MVE 11500/6*-85C1	E1	85C1									118	4.6	280	11.0	26	1.0	6																								
MVE 6500/1*-85A0	MVE 6500/12*-85A0	MVE 14360/6*-85A0	D1	85A0	704		27.7		170		6.7		200	7.9	320	12.6	28	1.1	4															288.4	264.7	635.8	583.6	M27	1"	28 x 50	1"	873	645
MVE 6500/1*-85B0	MVE 6500/12*-85B0	MVE 14360/6*-85B0	E1	85B0									124	4.9	305	12.0	26	1.0	6																			M24	7/8"	25 x 44	7/8"	696	513
MVE 6500/1*-85C1	MVE 6500/12*-85C1	MVE 14360/6*-85C1	E1	85C1									118	4.6	280	11.0	26	1.0	6																								

(*) Certification level.
(**) Working moment = 2 x static moment.
(***) Working moment = 2 x static moment.

Dimension with coarse degree of accurancy related to UNI 22768/1
Rights reserved to modify technical specifications.

Type 50 Hz	Type 60 Hz	For U.S. Market	Drawing	Size	c (mm) 50Hz	c (mm) 60Hz	c (in) 50Hz	c (in) 60Hz	m (mm) 50Hz	m (mm) 60Hz	m (in) 50Hz	m (in) 60Hz	a (mm)	a (in)	b (mm)	b (in)	Øg (mm)	Øg (in)	Holes n°
MVE 8000/1*-85A0	MVE 8000/12*-85A0	MVE 17750/6*-85A0	D1	85A0	774	704	30.5	27.7	205	170	8.1	6.7	200	7.9	320	12.6	28	1.1	4
MVE 8000/1*-85B0	MVE 8000/12*-85B0	MVE 17750/6*-85B0	E1	85B0									124	4.9	305	12.0	26	1.0	6
MVE 8000/1*-85C1	MVE 8000/12*-85C1	MVE 17750/6*-85C1	E1	85C1									118	4.6	280	11.0	26	1.0	6
MVE 9000/1*-85A0	MVE 9000/12*-85A0	MVE 19120/6*-85A0	D1	85A0	774	704	30.5	28	205	170	8.1	6.7	200	7.9	320	12.6	28	1.1	4
MVE 9000/1*-85B0	MVE 9000/12*-85B0	MVE 19120/6*-85B0	E1	85B0									124	4.9	305	12.0	26	1.0	6
MVE 9000/1*-85C1	MVE 9000/12*-85C1	MVE 19120/6*-85C1	E1	85C1									118	4.6	280	11.0	26	1.0	6
MVE 8000/1*-86A0	MVE 8000/12*-86A0	MVE 17750/6*-86A0	D1	86A0	774		30.5		205		8.1		200	7.9	320	12.6	28	1.1	4
MVE 8000/1*-86B0	MVE 8000/12*-86B0	MVE 17750/6*-86B0	E1	86B0									124	4.9	305	12.0	26	1.0	6
MVE 9000/1*-86A0	MVE 9000/12*-86A0	MVE 19120/6*-86A0	D1	86A0	774		30.5		205		8.1		200	7.9	320	12.6	28	1.1	4
MVE 9000/1*-86B0	MVE 9000/12*-86B0	MVE 19120/6*-86B0	E1	86B0									124	4.9	305	12.0	26	1.0	6
MVE 9800/1*-86C1	MVE 9800/12*-86C1	MVE 21600/6*-86C1	E1	86C1	884		34.8		260		10.2		118	4.6	280	11.0	26	1.0	6
MVE 11200/1*-86C1	MVE 11200/12*-86C1	MVE 24700/6*-86C1	E1	86C1	884		34.8		260		10.2		118	4.6	280	11.0	26	1.0	6
MVE 6500/1*-86C0	MVE 6500/12*-86C0	MVE 14360/6*-86C0	E1	86C0	894		35.2		265		10.4		118	4.6	280	11.0	26	1.0	6
MVE 7200/1*-86C0	MVE 7200/12*-86C0	MVE 15800/6*-86C0																	
MVE 8000/1*-86C0	MVE 8000/12*-86C0	MVE 17750/6*-86C0																	
MVE 9000/1*-86C0	MVE 9000/12*-86C0	MVE 19120/6*-86C0			950		37.4		293		11.5								
MVE 10000/1*-90A0	MVE 10000/12*-90A0	MVE 21400/6*-90A0	E1	90A0	908	798	35.7	31.4	260	205	10.2	8.1	125	4.9	380	15.0	39	1.5	6
MVE 10000/1*-90B0	MVE 10000/12*-90B0	MVE 21400/6*-90B0		90B0									118	4.6	394	15.5	26	1.0	
MVE 13000/1*-90A0	MVE 13000/12*-90A0	MVE 28660/6*-90A0		90A0	948	798	37.3	31.4	280	205	11.0	8.1	125	4.9	380	15.0	39	1.5	
MVE 13000/1*-90B0	MVE 13000/12*-90B0	MVE 28660/6*-90B0		90B0									118	4.6	394	15.5	26	1.0	
MVE 10000/1*-91A0	MVE 10000/12*-91A0	MVE 21400/6*-91A0	E1	91A0	908		35.7		260		10.2		125	4.9	380	15.0	39	1.5	6
MVE 10000/1*-91B0	MVE 10000/12*-91B0	MVE 21400/6*-91B0		91B0									118	4.6	394	15.5	26	1.0	
MVE 11400/1*-91A0	MVE 11400/12*-91A0	MVE 25100/6*-91A0		91A0									125	4.9	380	15.0	39	1.5	
MVE 11400/1*-91B0	MVE 11400/12*-91B0	MVE 25100/6*-91B0		91B0									118	4.6	394	15.5	26	1.0	
MVE 13000/1*-91A0	MVE 13000/12*-91A0	MVE 28660/6*-91A0		91A0	948		37.3		280		11.0		125	4.9	380	15.0	39	1.5	
MVE 13000/1*-91B0	MVE 13000/12*-91B0	MVE 28660/6*-91B0		91B0									118	4.6	394	15.5	26	1.0	

Type 50 Hz	d (mm)	d (in)	e (mm)	e (in)	f (mm)	f (in)	h (mm)	h (in)	i (mm)	i (in)	l (mm)	l (in)	n (mm)	n (in)	weight 50Hz (Kg)	weight 60Hz (Kg)	weight 50Hz (Lb)	weight 60Hz (Lb)	Screw Metric	Screw English	Washer Metric UNI 6592	Washer English Flat Washer	Clamping Torque (Nm)	Clamping Torque (ft-lb)
MVE 8000/1*-85A0	385	15.2	402	15.8	40	1.6	203	8.0	394	15.5	360	14.2	378	14.9	309.2	274.0	681.7	604.1	M27	1″	28 x 50	1″	873	645
MVE 8000/1*-85B0																			M24	7/8″	25 x 44	7/8″	696	513
MVE 8000/1*-85C1																								
MVE 9000/1*-85A0															321.8	291.0	709.4	641.5	M27	1″	28 x 50	1″	873	645
MVE 9000/1*-85B0																			M24	7/8″	25 x 44	7/8″	696	513
MVE 9000/1*-85C1																								
MVE 8000/1*-86A0															309.2	274.0	681.7	604.1	M27	1″	28 x 50	1″	873	645
MVE 8000/1*-86B0																			M24	7/8″	25 x 44	7/8″	696	645
MVE 9000/1*-86A0															321.8	291.0	709.4	641.5	M27	1″	28 x 50	1″	873	645
MVE 9000/1*-86B0																			M24	7/8″	25 x 44	7/8″	696	645
MVE 9800/1*-86C1															328.0	264.0	723.1	582.0	M24	7/8″	25 x 44	7/8″	696	645
MVE 11200/1*-86C1															350.0	286.0	771.6	630.5						
MVE 6500/1*-86C0	340	13.4	384	15.1	32	1.3	185	7.3	340	13.4	360	14.2	322	12.7	278.0	250.0	612.9	551.2	M24	7/8″	25 x 44	7/8″	696	645
MVE 7200/1*-86C0															290.0	258.0	639.3	568.8						
MVE 8000/1*-86C0															303.0	269.0	668.0	593.0						
MVE 9000/1*-86C0															320.0	278.0	705.5	612.9						
MVE 10000/1*-90A0	452	17.8	415	16.3	40	1.6	205	8.1	394	15.5	380	15.0	378	14.9	374.1	347.6	824.7	766.3	M36	1-3/8″	37 x 66	1-3/8″	1864	1370
MVE 10000/1*-90B0																			M24	7/8″	25 x 44	7/8″	696	513
MVE 13000/1*-90A0															416	364	917	802	M36	1-3/8″	37 x 66	1-3/8″	1864	1370
MVE 13000/1*-90B0																			M24	7/8″	25 x 44	7/8″	696	513
MVE 10000/1*-91A0	452	17.8	415	16.3	40	1.6	205	8.1	394	15.5	380	15.0	378	14.9	373.4	347.6	823.2	766.3	M36	1-3/8″	37 x 66	1-3/8″	1864	1370
MVE 10000/1*-91B0																			M24	7/8″	25 x 44	7/8″	696	513
MVE 11400/1*-91A0															404.3	361.3	891.3	796.5	M36	1-3/8″	37 x 66	1-3/8″	1864	1370
MVE 11400/1*-91B0																			M24	7/8″	25 x 44	7/8″	696	513
MVE 13000/1*-91A0															440	393	970	866	M36	1-3/8″	37 x 66	1-3/8″	1864	1370
MVE 13000/1*-91B0																			M24	7/8″	25 x 44	7/8″	696	513

(*) Certification level.
(**) Working moment = 2 x static moment.
(***) Custom footprint (available on request.

Dimension with coarse degree of accurancy related to UNI 22768/1
Rights reserved to modify technical specifications.

MVE

E-H-J*

8 POLI

750 rpm 50 Hz
900 rpm 60 Hz

TAB. 181

Type 50 Hz	Type 60 Hz	For U.S. Market	Drawing	Size	c (mm) 50Hz-60Hz	c (in) 50Hz-60Hz	m (mm) 50Hz-60Hz	m (in) 50Hz-60Hz	a (mm)	a (in)	b (mm)	b (in)	Ø g (mm)	Ø g (in)	Holes n°	d (mm)	d (in)	e (mm)	e (in)	f (mm)	f (in)	h (mm)	h (in)	i (mm)	i (in)	l (mm)	l (in)	n (mm)	n (in)	weight 50Hz-60Hz (Kg)	weight 50Hz-60Hz (Lb)	screw Metric	screw English	Washer Metric UNI 6592	Washer English Flat Washer	Clamping Torque (Nm)	Clamping Torque (ft-lb)
MVE 150/075*-40A0	MVE 150/090*-40A0	MVE 330/8*-40A	D1	40A0	330	12.99	78	3.07	105	4.13	140	5.51	13	0.51	4	170	6.69	196	7.72	20	0.79	92	3.62	174	6.85	166	6.54	160	6.30	20.6	45.4	M12	1/2"	13 x 24	1/2"	80.00	58.00
MVE 150/075*-40AX	MVE 150/090*-40AX	MVE 330/8*-40AX		40AX					***	***	***	***	***	***	***	190	7.48			15												***	***	***	***	***	***
MVE 250/075*-50A0	MVE 250/090*-50A0	MVE 550/8*-50A	D1	50A0	391	15.39	97	3.82	120	4.72	170	6.69	17	0.67	4	208	8.19	210	8.27	22	0.87	96	3.78	185	7.28	192	7.56	170	6.69	28.6	63.1	M16	5/8"	17 x 30	5/8"	185.00	137.00
MVE 250/075*-50C0	MVE 250/090*-50C0	MVE 550/8*-50C0		50C0					140	5.51	170	6.69	17	0.67	4																	M16	5/8"	17 x 30	5/8"	185.00	137.00
MVE 400/075*-50A0	MVE 400/090*-50A0	MVE 880/8*-50A0		50A0	455	17.91	129	5.08	120	4.72	170	6.69	17	0.67	4															34.1	75.2	M16	5/8"	17 x 30	5/8"	185.00	137.00
MVE 400/075*-50C0	MVE 400/090*-50C0	MVE 880/8*-50C0		50C0					140	5.51	170	6.69	17	0.67	4																	M16	5/8"	17 x 30	5/8"	185.00	137.00
MVE 650/075*-60A0	MVE 650/090*-60A0	MVE 1430/8*-60A0	D1	60A0	446	17.56	112	4.41	140	5.51	190	7.48	17	0.67	4	230	9.06	260	10.24	26	1.02	124	4.88	240	9.45	218	8.58	222	8.74	63.3	139.6	M16	5/8"	17 x 30	5/8"	185.00	137.00
MVE 650/075*-60C0	MVE 650/090*-60C0	MVE 1430/8*-60C0		60C0					140	5.51	170	6.69	17	0.67																							
MVE 900/075*-60A0	MVE 900/090*-60A0	MVE 2000/8*-60A0		60A0	490	19.29	134	5.28	140	5.51	190	7.48	17	0.67																69.6	153.4						
MVE 900/075*-60C0	MVE 900/090*-60C0	MVE 2000/8*-60C0		60C0					140	5.51	170	6.69	17	0.67																							
MVE 1300/075*-70A0	MVE 1300/090*-70A0	MVE 2900/8*-70A0	D1	70A0	563	22.17	154	6.06	155	6.10	225	8.86	22	0.87	4	275	10.83	290	11.42	30	1.18	140	5.51	256	10.08	250	9.84	236	9.29	90.2	198.9	M20	13/16"	21 x 37	13/16"	373.00	275.00
MVE 1300/075*-70B0	MVE 1300/090*-70B0	MVE 2900/8*-70B0		70B0					160	6.30	210	8.27	17	0.67																							
MVE 1300/075*-70C0	MVE 1300/090*-70C0	MVE 2900/8*-70C0		70C0					166	6.54	230	9.06	22	0.87																							
MVE 2100/075*-75A0	MVE 2100/090*-75A0	MVE 4620/8*-75A0	D1	75A0	692	27.24	205	8.07	155	6.10	255	10.04	23.5	0.93	4	304	11.97	314	12.36	30	1.18	147	5.79	285	11.22	277	10.91	265	10.43	150.4	331.6	M22	7/8"	23 x 39	7/8"	550.00	411.00
MVE 2100/075*-75C0	MVE 2100/090*-75C0	MVE 4620/8*-75C0	E1	75C0					83	3.27	230	9.06	22	0.87	6																	M20	13/16"	21 x 37	13/16"	373.00	275.00
MVE 2100/075*-75C1	MVE 2100/090*-75C1	MVE 4620/8*-75C1		75C1					105	4.13	248	9.76	22	0.87	6																						
MVE 3100/075*-80A0	MVE 3100/090*-80A0	MVE 6820/8*-80A0	D1	80A0	683	26.89	183	7.20	180	7.09	280	11.02	26	1.02	4	332	13.07	354	13.94	32	1.26	170	6.69	330	12.99	312	12.28	311	12.24	201.0	443.1	M24	15/16"	25 x 44	15/16"	696.00	513.00
MVE 3800/075*-80A0	MVE 3800/090*-80A0	MVE 8360/8*-80A0		80A0	733	28.86	208	8.19																						219.0	482.8						
MVE 3800/075*-80C0	MVE 3800/090*-80C0	MVE 8360/8*-80C0	E1	80C0	794	31.26	242	9.53	105	4.13	248	9.76	22	0.87	6	300	11.81	335	13.19	30	1.18	163	6.42	305	12.01	298	11.73	284	11.18	198.0	436.5	M20	13/16"	21 x 37	13/16"	373.00	275.00
MVE 4200/075*-80C0	MVE 4200/090*-80C0	MVE 9240/8*-80C0																												220.0	485.0						
MVE 5300/075*-80C0	MVE 5300/090*-80C0	MVE 11660/8*-80C0			884	34.80	287	11.30																						240.0	529.1						
MVE 4200/075*-85A0	MVE 4200/090*-85A0	MVE 9240/8*-85A0	D1	85A0	704	27.72	170	6.69	200	7.87	320	12.60	28	1.10	4	385	15.16	402	15.83	40	1.57	203	7.99	394	15.51	360	14.17	378	14.88	268.0	590.8	M27	1"	28 x 50	1"	873.00	645.00
MVE 4200/075*-85B0	MVE 4200/090*-85B0	MVE 9240/8*-85B0	E1	85B0					124	4.88	305	12.01	26	1.02	6																	M24	7/8"	25 x 44	7/8"	696.00	513.00
MVE 4200/075*-85C1	MVE 4200/090*-85C1	MVE 9240/8*-85C1		85C1					118	4.65	280	11.02	26	1.02	6																						
MVE 5300/075*-85A0	MVE 5300/090*-85A0	MVE 11660/8*-85A0	D1	85A0	704	27.72	170	6.69	200	7.87	320	12.60	28	1.10	4															289.0	637.1	M27	1"	28 x 50	1"	873.00	645.00
MVE 5300/075*-85B0	MVE 5300/090*-85B0	MVE 11660/8*-85B0	E1	85B0					124	4.88	305	12.01	26	1.02	6																	M24	7/8"	25 x 44	7/8"	696.00	513.00
MVE 5300/075*-85C1	MVE 5300/090*-85C1	MVE 11660/8*-85C1		85C1					118	4.65	280	11.02	26	1.02	6																						
MVE 6500/075*-85A0	MVE 6500/090*-85A0	MVE 14300/8*-85A0	D1	85A0	774	30.47	205	8.07	200	7.87	320	12.60	28	1.10	4															308.0	679.0	M27	1"	28 x 50	1"	873.00	645.00
MVE 6500/075*-85B0	MVE 6500/090*-85B0	MVE 14300/8*-85B0	E1	85B0					124	4.88	305	12.01	26	1.02	6																	M24	7/8"	25 x 44	7/8"	696.00	513.00
MVE 6500/075*-85C1	MVE 6500/090*-85C1	MVE 14300/8*-85C1		85C1					118	4.65	280	11.02	26	1.02	6																						
MVE 5300/075*-86C0	MVE 5300/090*-86C0	MVE 11660/8*-86C0	E1	86C0	894	35.20	265	10.43	118	4.65	280	11.02	26	1.02	6	340	13.39	384	15.12	32	1.26	185	7.28	340	13.39	360	14.17	322	12.68	280.0	617.3	M24	7/8"	25 x 44	7/8"	696.00	513.00
MVE 6500/075*-86C0	MVE 6500/090*-86C0	MVE 14300/8*-86C0																												305.0	672.4						
MVE 10000/075*-90A0	MVE 10000/090*-90A0	MVE 22000/8*-90A0	E1	90A0	948	37.32	280	11.02	125	4.92	380	14.96	39	1.54	6	452	17.80	415	16.34	40	1.57	205	8.07	394	15.51	380	14.96	378	14.88	422.2	930.8	M36	1-3/8"	37 x 66	1-3/8"	1864	1370
MVE 10000/075*-90B0	MVE 10000/090*-90B0	MVE 22000/8*-90B0		90B0					118	4.63	394	15.51	26	1.02																		M24	7/8"	25 x 44	7/8"	696	513
MVE 10000/075*-91A0	MVE 10000/090*-91A0	MVE 22000/8*-91A0		91A0	948	37.32	280	11.02	125	4.92	380	14.96	39	1.54	6	452	17.80	415	16.34	40	1.57	205	8.07	394	15.51	380	14.96	378	14.88	422.2	930.8	M36	1-3/8"	37 x 66	1-3/8"	1864	1370
MVE 10000/075*-91B0	MVE 10000/090*-91B0	MVE 22000/8*-91B0		91B0					118	4.63	394	15.51	26	1.02																		M24	7/8"	25 x 44	7/8"	696	513

(*) Certification level.
(**) Working moment = 2 x static moment.
(***) Working moment = 2 x static moment.

Dimension with coarse degree of accurancy related to UNI 22768/1
Rights reserved to modify technical specifications.

Type 50 Hz	Type 60 Hz	For U.S. Market	Drawing	Size		c		m		a		b		Øg		Holes		d		e		f		h		i		l		n		weight		Screw		Washer		Clamping Torque	
				50Hz	60Hz	(mm)	(in)	(mm)	(in)	(mm)	(in)	(mm)	(in)	(mm)	(in)	n°		(mm)	(in)	(mm)	(in)	(mm)	(in)	(mm)	(in)	(mm)	(in)	(mm)	(in)	(mm)	(in)	50Hz (Kg)	60Hz (Kg)	50Hz (Lb)	60Hz (Lb)	Metric	English	Metric UNI6592	English Flat Washer	(Nm)	(ft-lb)
MVE 60/3*-10A0	MVE 60/3S*-10A0	MVE 160/2*-10A0	A1	10A0		213	8.4	45	1.8	62-74	2.44-2.91	106.0	4.2	9	0.4	4		130	5.1	135	5.3	11	0.4	50	2.0	96	3.8	107	4.2	85	3.3	-		-		M8	5/16"	8.4 x 16	5/16"	23	17
MVE 100/3*-10A0	MVE 100/3S*-10A0	MVE 220/2*-10A0								33	1.3	83-102	3.27-4.02	7	0.3																	5.0		11.0		M6	1/4"	6.4 x 12	1/4"	9	7
MVE 200/3*-20A0	MVE 200/3S*-20A0	MVE 440/2*-20A0	B1	20A0		233	9.2	54	2.1	62-74	2.44-2.91	106	4.2	9	0.4	4		130	5.1	154	6.1	15	0.6	65.0	2.6	125	4.9	120	4.7	112	4.4	7.0		15.4		M8	5/16"	8.4 x 16	5/16"	23	17
MVE 200/3*-20AX	MVE 200/3S*-20AX	MVE 440/2*-20AX		20AX						***	***	***	***	***	***			149	5.9													7.1		15.7		*	*	*	*	*	*
MVE 200/3*-23A0	MVE 200/3S*-23A0	MVE 440/2*-23A0	F1	23A		218.0	8.6	53.0	2.1	62-74	2.44-2.91	106.0	4.2	9.0	0.4																					M8	5/16"	8.4 x 16	5/16"	23	17
										65	2.6	140.0	5.5	13.0	0.5	4.0	164.0	6.5	140.0	5.5	25.0	1.0	82.0	3.2	116.0	4.6	159.0	6.3	110.0	4.3	7		16		M12	1/2"	13 x 24	1/2"	80	59
										115	4.5	135.0	5.3	11.0	0.4																			M10	3/8"	10.5 x 20	3/8"	45	33
										135	5.3	115.0	4.5	11.0	0.4																			M10	3/8"	10.5 x 20	3/8"	45	33
MVE 300/3*-30A0	MVE 300/3S*-30A0	MVE 690/2*-30A0	C1	30A0		254	10.0	42	1.7	80	3.1	110	4.3	11.0	0.4																			M10	3/8"	10.5 x 20	3/8"	45	33
										90	3.5	125	4.9	13.0	0.5																			M12	1/2"	13 x 24	1/2"	80	58
										124	4.9	110	4.3	11.0	0.4	4.0	154	6.06	173	6.81	15	0.59	79	3.11	150	5.91	166	6.54	134	5.28	9.8		21.6		M10	3/8"	10.5 x 20	3/8"	45	33
										135	5.3	115	4.5	11.0	0.4																			M10	3/8"	10.5 x 20	3/8"	45	33
MVE 300/3*-30AX	MVE 300/3S*-30AX	MVE 690/2*-30AX		30AX						*	*	*	*	*	*																			*	*	*	*	*	*

(*) Certification level.
(**) Working moment = 2 x static moment.
(***) Custom footprint (available on request.

Dimension with coarse degree of accurancy related to UNI 22768/1
Rights reserved to modify technical specifications.

MVE SIZE 20-50 (50 Hz)

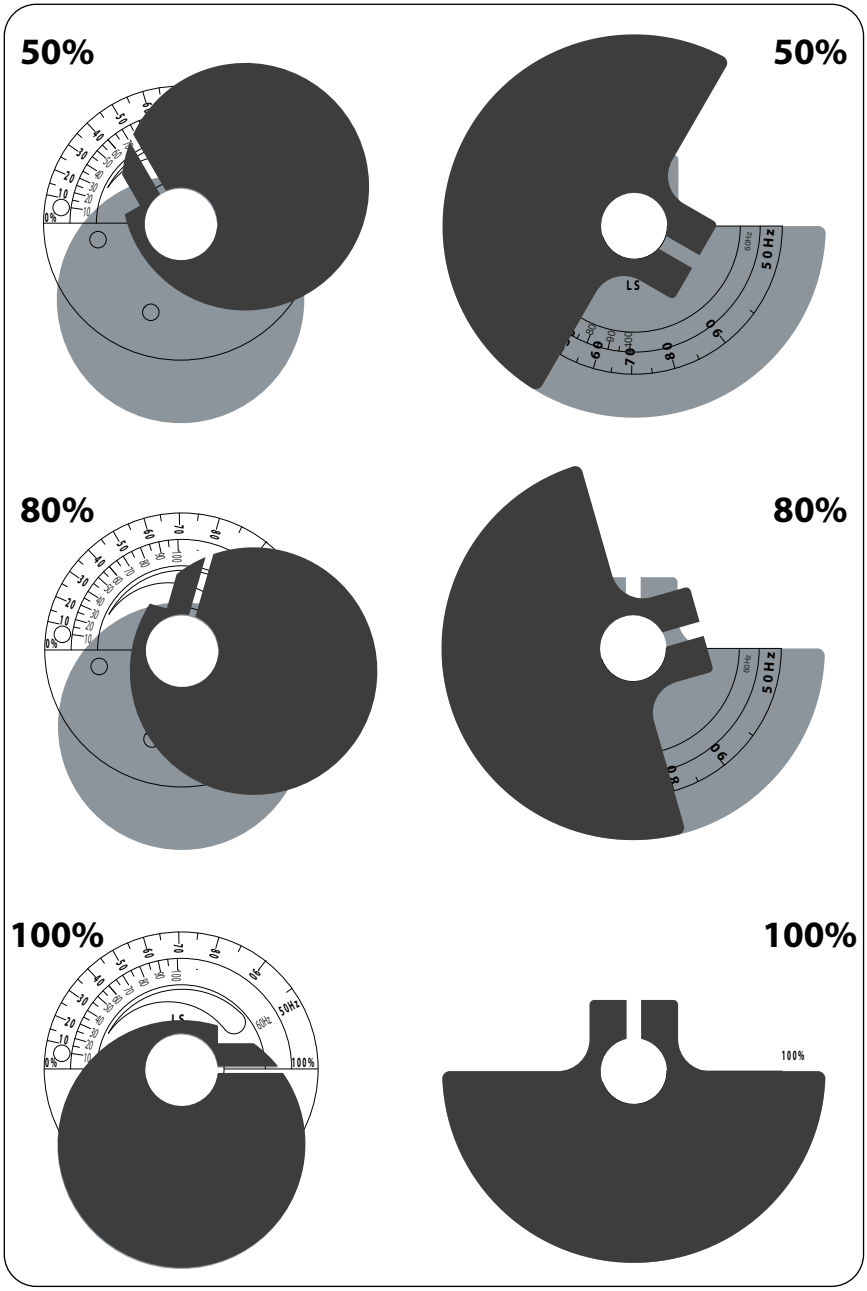

MVE SIZE 20-50 (60 Hz)

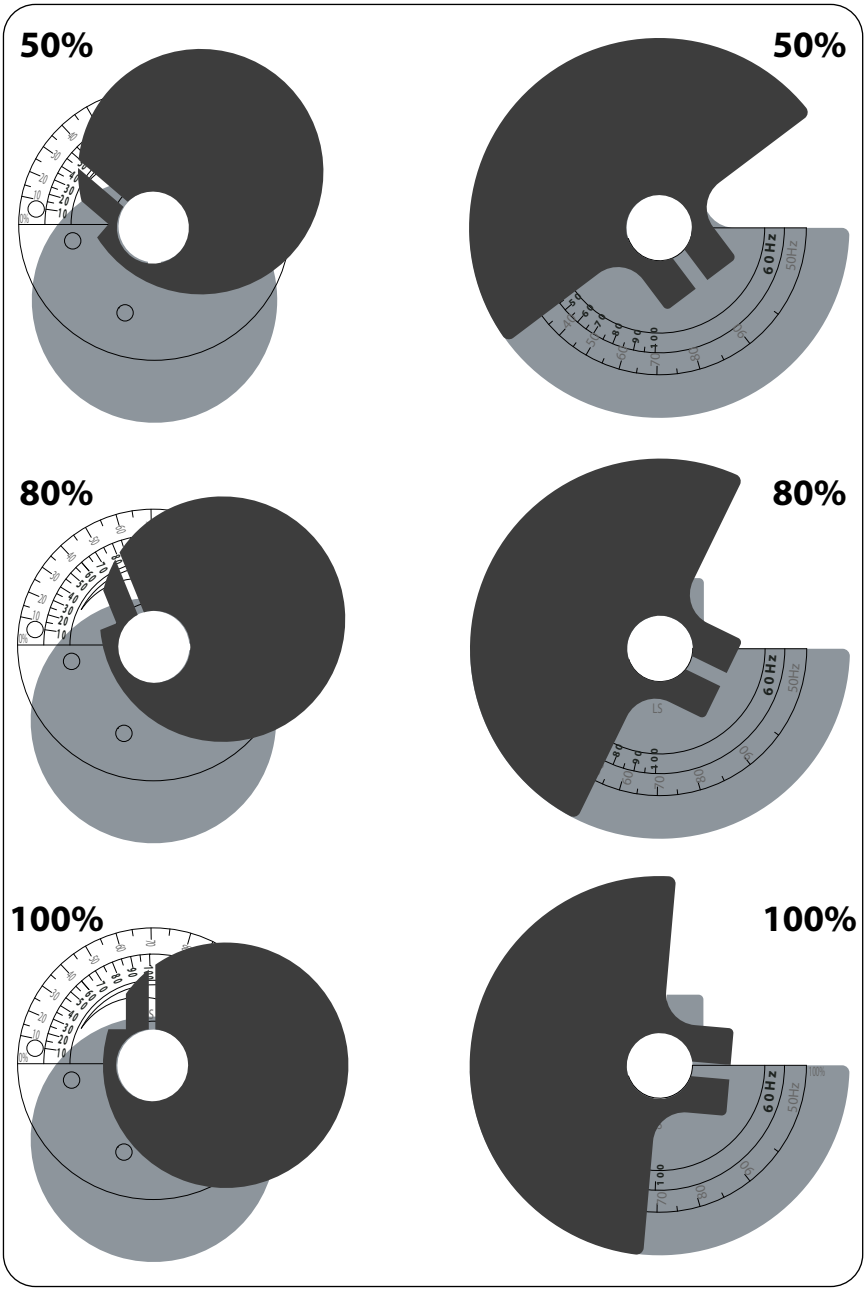

MVE SIZE 60-110 (50-60 Hz)

50%

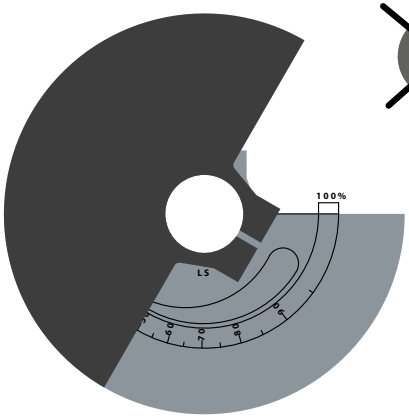

≤20%

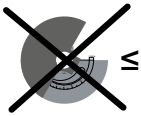

80%

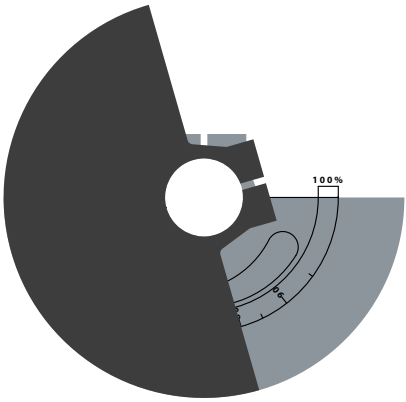

100%

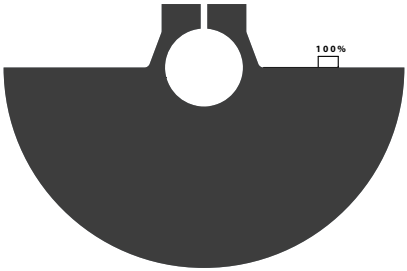

MVE SIZE 85-110 (50-60 Hz)

≤20%

50%

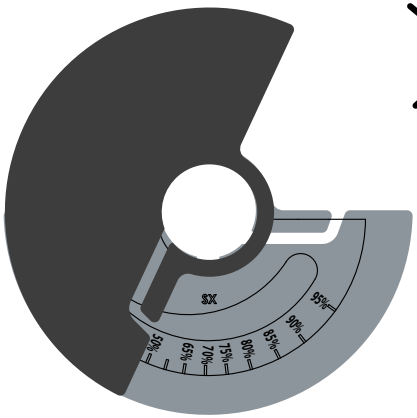

80%

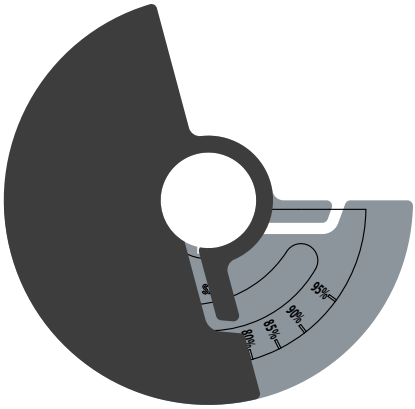

100%

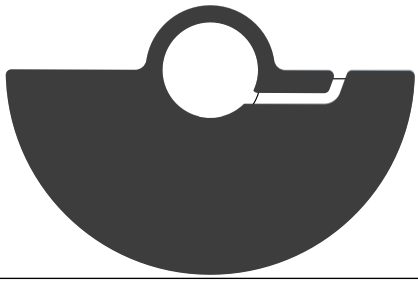

	MVE 60/3		MVE 60/36 MVE 160/2	MVE 100/3		MVE 100/36 MVE 220/2	MVE 40/15		MVE 40/18 MVE 70/4
	50 Hz		60 Hz	50 Hz		60 Hz	50 Hz		60 Hz
N°	16			24			24		
0	FC.100%		/	FC.100%		/	FC.100%		
1	FC.75%		FC.100%	FC.83.3%		/	FC.83.3%		
2	FC.50%		FC.66%	FC.66.6%		FC.100%	FC.66.6%		
3	FC.25%		FC.33%	FC.49.9%		FC.75%	FC.49.9%		
4	/		/	FC.33.2%		FC.50%	FC.33.2%		
5	/		/	FC.16.5%		FC.25%	FC.16.5%		

MASSE GIRATE PER LATO
TURNED BLADE ON EACH SIDE
GEDREHTE LAMELLENGEW. AN JEDER SEITE
MASSES TOURNEE SUR CHAQUE FACE

	Size 10-91		Size 10-50 / MICRO MVE				Size 60-90				Size 100-110			
	TERMINAL BOX COVER - COPERCHIO MORSETTIERA- KLEMMKASTENDECKEL -		FLANGE -FRAME FLANGIA-CORPO FLANSCHE-RAHMEN CADRE - FLANCHE		COVER - FRAME COP.-CORPO ABDECKUNG-RAHMEN CADRE - COP.		COVER - FRAME COP.-CORPO ABDECKUNG-RAHMEN CADRE - COP.		FLANGE -FRAME FLANGIA-CORPO FLANSCHE-RAHMEN CADRE - FLANCHE		COVER - FRAME COP.-CORPO ABDECKUNG-RAHMEN CADRE - COP.		FLANGE -FRAME FLANGIA-CORPO FLANSCHE-RAHMEN CADRE - FLANCHE	
	Nm	Ft -Lb	Nm	Ft -Lb	Nm	Ft - Lb	Nm	Ft -Lb	Nm	Ft -Lb	Nm	Ft -Lb	Nm	Ft -Lb
M3			1.5	1.1	1.5	1.1								
M5	7	5.2	7	5.2	7	5.2								
M6	11	8.1	11	8.1	11	8.1								
M8	25	18.4	25	18.4	25	18.4	25	18.4						
M10	48	35.4					48	35.4			48	35.4		
M12									89	66				
M16									215	159			215	159
M20									415	306			415	306

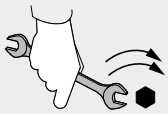

	MASS MASSE MASEN MASSES			
	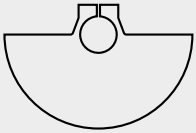		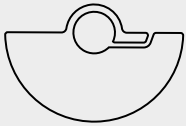	
	Nm	Ft -Lb	Nm	Ft -Lb
M6	11	8.1	/	/
M8	25	18.4	/	/
M10	52	38,4	/	/
M12	89	66	90	66.3
M14	/	/	135	99.5
M16	215	159	170	125.3
M20	415	306	340	250.7

	Size 10	
	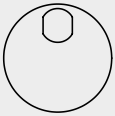	
	Nm	Ft -Lb
M6	10	7.4
M15	170	126

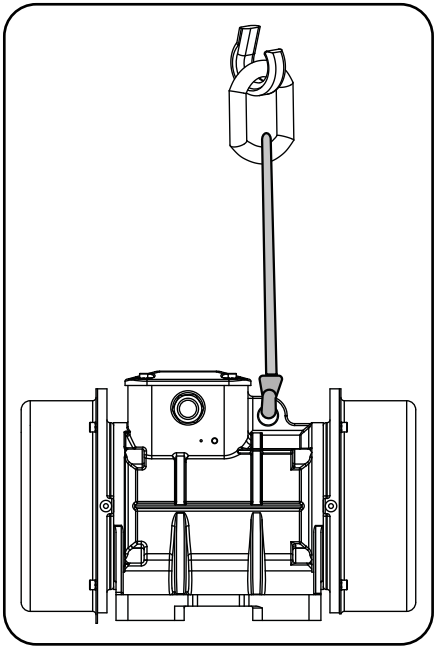

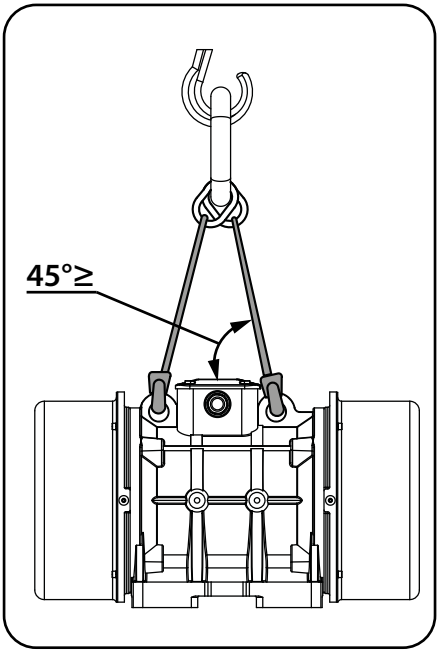
45°≥

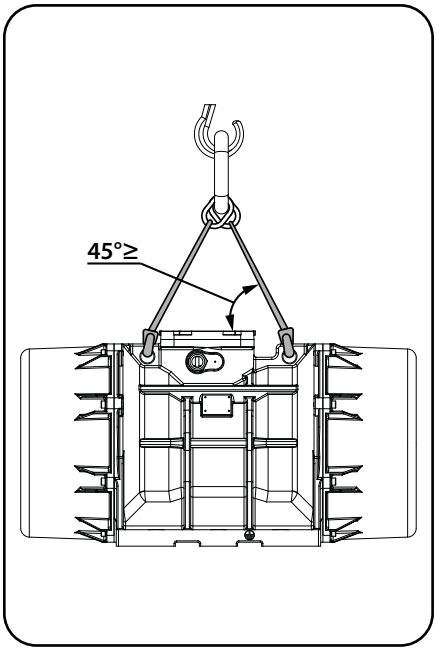
45°≥

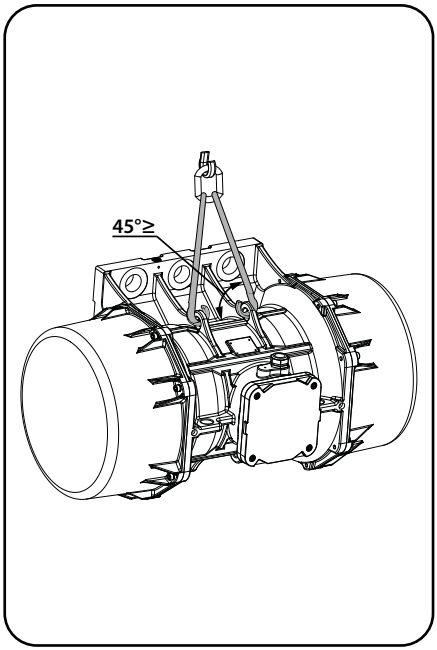
45°≥

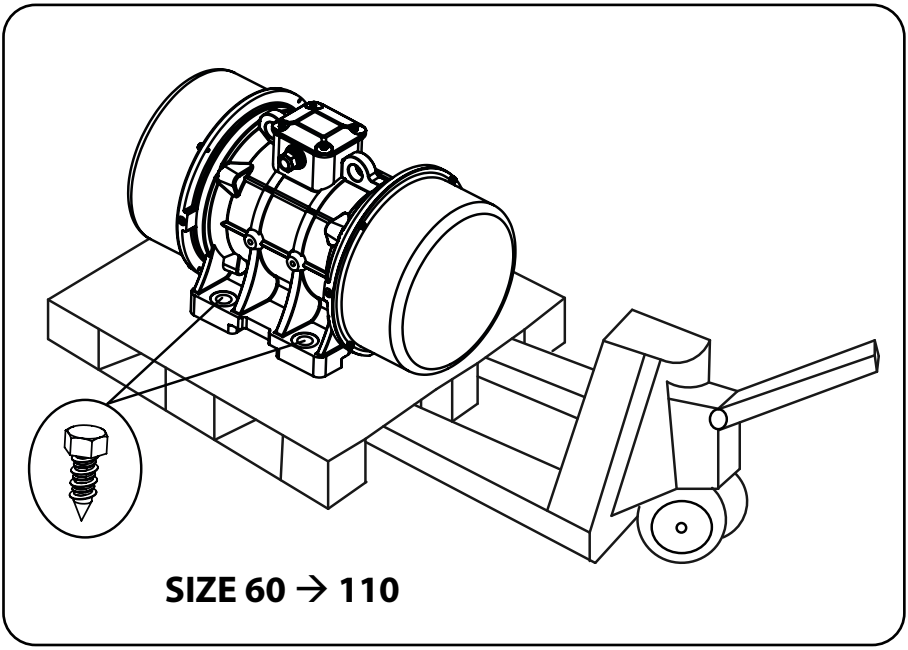

SIZE 60 → 110

NOTE

NOTE

NOTE

NOTE

Numero di serie
Serial Number
Seriennummer
Numéro de série

OLI S.p.A.
Via Canalazzo, 35
I - 41036 Medolla - (MO)
ITALY

☎ +39 / 0535 / 410611
Fax +39 / 0535 / 410650
E-mail info@olivibra.com
Internet www.olivibra.com